MASTER

PENTWATER TOWNSHIP BOARD

AGENDA PACKET

REGULAR BOARD MEETING
&
PUBLIC HEARING ON BUDGET

March 13, 2024 at 6:00 p.m.

Lynne Cavazos, Supervisor
Heather A. Douglas, Treasurer
Maureen H Murphy, Clerk

Mike Flynn, Trustee
Dean Holub, Trustee

RECONVENE REGULAR MEETING

7. Call to Order
8. Roll Call
9. Elected Official Reports:
    A. Supervisor's Report
    B. Clerk's Report
    C. Treasurer's Report
10. Library Board Packet
11. Fire Department Agenda/Minutes
12. Recreation Report
13. Staff Reports:
    A. Zoning Administrator
    B. Assessor
    C. Cemetery Sexton (no report)
    D. Transfer Station (no report)
14. Unfinished Business
    A. Transfer Station Fee Structure
15. New Business
    A. Adoption of FY 2024/25 Budgets for General Fund, Road Fund, Cemetery Fund, Fire Department Fund, American Rescue Plan Fund, and Sewer Fund – Resolution #2024-05
    B. Adoption of Annual Salary/Wage Schedule, Elected - #2024-06
    C. Pentwater Township Bank Depositories - #2024-07
    D. Authorization to Buy and Sell - #2024-08
    E. Wages and Salaries for Non-Elected Personnel - #2024-09
    F. Resolution in Support of Michigan Township Participating Grant Application - #2024-10
    G. Fire Department Millage Proposal
    H. Q4 2023-24 EOY Budget amendments
    I. Township Board Committee Appointments for 2024/25
    J. Township Staff Appointments for 2024/25
    K. Township Attorney Appointment for 2024/25
    L. Reappointments to Township Planning Commission
    M. Reappointments to Township Zoning Board of Appeals
    N. Reappointment of Township Road Committee

O. Bid for Brining of Township Roads

P. FY2024/25 Household Hazardous Waste Program

Q. Fleis & Vandenbrink Proposal to prepare a project plan for submission to the State CWSRF for consideration by EGLE

R. Approval of Bid for Preliminary Longbridge Platform Repair

S. Proposal to shift Township Board Meeting dates which conflict with 2024 Elections

16. Public Comments

17. Other Items from Board Members

18. Adjournment

Public Participation at Board of Trustee Meetings

1. When addressing the Board, please state your name and address and direct all questions and comments to the Chairperson.

2. We ask that you show common courtesy, display respect for all participants, and refrain from any personal attacks.

3. You may address the Board on any agenda item under the PUBLIC COMMENTS ON AGENDA ITEMS ONLY. Please limit your comments to three (3) minutes.

4. You may address the Board on any matter that falls within the Boards jurisdiction under the PUBLIC COMMENTS PORTION OF THE AGENDA (maximum three minutes).

5. If you would like to meet with any Board or staff member following the meeting, please make your wishes known.

6. The public, press and/or legal stenographers are permitted to record the proceedings – either video or audio – as long as it does not interfere with the meeting.

Individuals with disabilities requiring auxiliary aids or services should contact the Pentwater Township Clerk by writing or calling: 500 N. Hancock St., P.O. Box 512, Pentwater, MI 49449 (231) 869-6231 at least one week in advance of the meeting.

Adopted July 14, 2010 by action of the Township Board

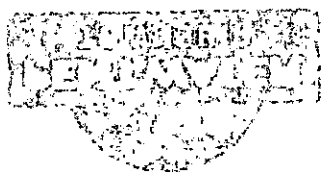

PENTWATER TOWNSHIP BOARD PENTWATER COMMUNITY HALL 500 N. HANCOCK STREET, PENTWATER, MI 49449 ***Draft Minutes*** 14 February 2024 ZOOM Available for Audience	
Supervisor Cavazos called the Regular Board Meeting to order at 6:02 PM **Members Present:** Cavazos, Murphy, Douglas, Flynn **Members Absent**: Holub **Staff Present:** Keith Edwards – Deputy Supervisor & Zoning Administrator **Others Present:** Valarie McHugh, Tom Roose, Paula Degregorio, Ron Christians, Unknown. **Present via Zoom:** Dean Holub - Trustee	**CALL TO ORDER** **ROLL CALL**

Moved by Flynn and seconded by Douglas to accept the Consent Agenda as presented:
• Prior Meeting Minutes (January 10, 2024 & January 17, 2024)
• Correspondence: None
• Budget Reports: (4/1/23 thru 1/31/24)
• Claims/Bills (payroll, paid, and to be paid) for the 1/5/24thru 2/14/24 as follows:
  ○ Township - $40,633 (includes any Road Fund payroll)
  ○ Cemetery - $6,129
  ○ Fire - $3,798
  ○ Road - $0
  ○ Sewer - $18,753
Roll call vote:
Yes: Cavazos, Murphy, Flynn, Douglas
No: None
Motion Carries
	CONSENT AGENDA - Review & Action

Moved by Douglas and seconded by Flynn to accept the meeting agenda as presented. Roll call vote: Yes: Cavazos, Murphy, Flynn, Holub, Douglas No: None Motion Carried	**MEETING AGENDA**
• None	**PUBLIC COMMENTS**
Supervisor Cavazos communicated the following: 1. Update on Oceana County Road Commission (OCRC) Bond Money	

Yes: Cavazos, Murphy, Douglas, Flynn No: None Motion: Carries	
Motion by Murphy, seconded by Douglas to approve the Transfer Station Free Days as follows: June 15th and October 5th Roll call vote: Yes: Cavazos, Murphy, Douglas, Flynn No: None Motion: Carries	**NEW BUSINESS i) Transfer Station Free Days for 2024**
Motion by Douglas, seconded by Cavazos to approve the proposal to hire CityWebCentral to design a new Pentwater Township Website with costs not to exceed $15,000 Roll call vote: Yes: Cavazos, Murphy, Douglas, Flynn No: None Motion: Carries	**NEW BUSINESS j) Proposal to Hire City Web Central as Website Developer**
Township fee schedule was reviewed and compared to other sites including Oceana County Transfer station. Board requests Clerk's office to propose new fee structure at next meeting. It was further proposed to begin charging a fee for yard waste disposal, with $5/load proposed. (This would require gating of the yard waste area, and possibly another attendant to manage that area).	**NEW BUSINESS k) Discussion: Transfer Station Fee Schedule**
• Ron Christians asked which budget year the approved website development would be associated with.	**PUBLIC COMMENTS**
• None	**OTHER ITEMS FROM BOARD MEMBERS**
Moved by Flynn, seconded by Douglas to adjourn the meeting at 7:42 PM. Motion carried via voice vote.	**ADJOURNMENT**
_____ _____ Maureen Murphy, Township Clerk Date	**Notes taken by Deputy Supervisor Keith Edwards & later formalized by Deputy Clerk Glenn Beavis**

REVENUE AND EXPENDITURE REPORT FOR PENTWATER TOWNSHIP

PERIOD ENDING 02/29/2024

GL NUMBER	DESCRIPTION	2023-24 AMENDED BUDGET	YTD BALANCE 02/29/2024 NORMAL (ABNORMAL)	ACTIVITY FOR MONTH 02/29/2024 INCREASE (DECREASE)	AVAILABLE BALANCE NORMAL (ABNORMAL)	% BDGT USED
Fund 101 - GENERAL FUND						
Revenues						
Dept 000						
101-000-401.000	FROM PREV YEAR-END	98,387.23	0.00	0.00	98,387.23	0.00
101-000-402.000	CURRENT REAL PROPERTY	299,244.00	207,280.40	70,135.99	91,963.60	69.27
101-000-405.000	TAX ADMINISTRATION FEE	60,700.00	71,528.26	14,319.76	(10,828.26)	117.84
101-000-405.001	ADMIN FEE LAND BANK	0.00	0.25	0.00	(0.25)	100.00
101-000-406.000	DELIQUENT TAX ADMIN FEE	0.00	0.00	0.00	0.00	0.00
101-000-411.000	DELINQUENT REAL PROP TAX	0.00	13,219.51	0.00	(13,219.51)	100.00
101-000-429.000	COMM FOREST TAX	20.00	65.46	0.00	(45.46)	327.30
101-000-432.000	STATE PMT IN LIEU OF TAX (PILT)	3,300.00	3,664.16	0.00	(364.16)	111.04
101-000-434.000	TRAILER PARK TAX	200.00	0.00	0.00	200.00	0.00
101-000-442.000	HOMESTEAD DENIALS	0.00	778.99	0.00	(778.99)	100.00
101-000-445.000	PENALTY & INTEREST TAXES	100.00	0.00	0.00	100.00	0.00
101-000-477.000	FRANCHISE FEES (CHARTER COMM)	8,000.00	6,259.30	0.00	1,740.70	78.24
101-000-479.000	ZONING PERMIT FEES	2,000.00	1,660.00	440.00	340.00	83.00
101-000-481.000	PLANNING COMMISSION REVIEW FEES	1,050.00	650.00	125.00	400.00	61.90
101-000-546.000	METRO ACT	3,900.00	3,215.62	0.00	684.38	82.45
101-000-549.000	STATE GRANT ELECTION REIMB	4,900.00	0.00	0.00	4,900.00	0.00
101-000-573.000	LOCAL COMMUNITY STABILIZATION SHARE	0.00	886.39	0.00	(886.39)	100.00
101-000-574.000	STATE SHARED REVENUE	56,100.00	68,718.00	0.00	(12,618.00)	122.49
101-000-602.000	COPY FEES	0.00	73.50	0.00	(73.50)	100.00
101-000-603.000	ZBA FEES	1,600.00	800.00	0.00	800.00	50.00
101-000-607.000	ZONING - LAND DIV REVIEW FEES	0.00	0.00	0.00	0.00	0.00
101-000-607.001	ZONING - PC REVIEW FEES	0.00	0.00	0.00	0.00	0.00
101-000-607.002	ZONING - ZBA REVIEW FEES	0.00	0.00	0.00	0.00	0.00
101-000-607.003	ZONING - TWP BOARD REVIEW FEES	0.00	0.00	0.00	0.00	0.00
101-000-628.000	TRANSFER SITE FEES	11,200.00	11,535.00	0.00	(335.00)	102.99
101-000-664.000	INTEREST INCOME	300.00	18,601.90	1,299.32	(18,301.90)	6,200.63
101-000-672.000	OTHER REVENUE	1,400.00	142.58	0.00	1,257.42	10.18
101-000-672.001	VENDOR REFUNDS	0.00	0.00	0.00	0.00	0.00
101-000-686.000	MISCELLANEOUS	4,500.00	24,354.96	2,547.00	(19,854.96)	541.22
101-000-699.000	TRANSFER IN	0.00	0.00	0.00	0.00	0.00
Total Dept 000		556,901.23	433,434.28	88,867.07	123,466.95	77.83
TOTAL REVENUES		556,901.23	433,434.28	88,867.07	123,466.95	77.83
Expenditures						
Dept 101 - TOWNSHIP BOARD						
101-101-702.000	SALARIES & WAGES	3,307.50	2,950.84	134.42	356.66	89.22
101-101-705.000	EMPLOYER FICA CONTRIB	253.02	225.72	10.28	27.30	89.21
101-101-999.000	TRANSFER OUT	0.00	0.00	0.00	0.00	0.00
Total Dept 101 - TOWNSHIP BOARD		3,560.52	3,176.56	144.70	383.96	89.22
Dept 171 - SUPERVISOR						
101-171-702.000	SALARIES & WAGES	35,653.80	32,682.76	2,971.16	2,971.04	91.67
101-171-702.001	DEPUTY WAGES	9,178.03	9,786.51	340.00	(608.48)	106.63
101-171-705.000	EMPLOYER FICA CONTRIB	3,429.63	3,248.91	253.30	180.72	94.73
101-171-727.000	TWP SUPERVISOR OFFICE SUPPLIES	0.00	0.00	0.00	0.00	0.00
101-171-815.000	EDUCATION/TRAINING	0.00	0.00	0.00	0.00	0.00
101-171-910.000	EDUCATION/TRAINING	800.00	100.00	0.00	700.00	12.50
101-171-913.000	TRAVEL	600.00	897.54	300.61	(297.54)	149.59
101-171-955.000	MISCELLANEOUS	0.00	37.50	0.00	(37.50)	100.00

PERIOD ENDING 02/29/2024

GL NUMBER	DESCRIPTION	2023-24 AMENDED BUDGET	YTD BALANCE 02/29/2024 NORMAL (ABNORMAL)	ACTIVITY FOR MONTH 02/29/2024 INCREASE (DECREASE)	AVAILABLE BALANCE NORMAL (ABNORMAL)	% BDGT USED
Fund 101 - GENERAL FUND						
Expenditures						
Total Dept 171 - SUPERVISOR		49,661.46	46,753.22	3,865.07	2,908.24	94.14
Dept 215 - CLERK						
101-215-702.000	SALARIES & WAGES	35,653.80	33,849.40	2,971.16	1,804.40	94.94
101-215-702.001	DEPUTY WAGES	26,773.95	24,923.73	960.00	1,850.22	93.09
101-215-705.000	EMPLOYER FICA CONTRIB	4,775.72	4,536.67	300.73	239.05	94.99
101-215-707.000	PAID TIME OFF	0.00	245.14	0.00	(245.14)	100.00
101-215-712.000	RECORDING SECRETARY	0.00	0.00	0.00	0.00	0.00
101-215-727.000	TWP CLERK OFFICE SUPPLIES	0.00	183.53	0.00	(183.53)	100.00
101-215-812.000	REC SECRETARY	500.00	451.42	0.00	48.58	90.28
101-215-815.000	EDUCATION/TRAINING	0.00	0.00	0.00	0.00	0.00
101-215-860.000	TRAVEL EXPENSES	0.00	13.20	0.00	(13.20)	100.00
101-215-910.000	EDUCATION/TRAINING	2,000.00	1,055.86	0.00	944.14	52.79
101-215-913.000	TRAVEL	3,000.00	2,912.38	450.10	87.62	97.08
101-215-955.000	MISCELLANEOUS	0.00	80.04	0.00	(80.04)	100.00
Total Dept 215 - CLERK		72,703.47	68,251.37	4,681.99	4,452.10	93.88
Dept 247 - BOARD OF REVIEW						
101-247-702.000	SALARIES & WAGES	1,102.50	433.60	0.00	668.90	39.33
101-247-705.000	EMPLOYER FICA CONTRIB	84.34	33.16	0.00	51.18	39.32
101-247-815.000	EDUCATION/TRAINING	0.00	0.00	0.00	0.00	0.00
101-247-860.000	TRAVEL EXPENSES	100.00	0.00	0.00	100.00	0.00
101-247-910.000	EDUCATION/TRAINING	125.00	0.00	0.00	125.00	0.00
101-247-955.000	MISCELLANEOUS	500.00	29.85	0.00	470.15	5.97
Total Dept 247 - BOARD OF REVIEW		1,911.84	496.61	0.00	1,415.23	25.98
Dept 253 - TREASURER						
101-253-702.000	SALARIES & WAGES	35,653.80	32,682.76	2,971.16	2,971.04	91.67
101-253-702.001	DEPUTY WAGES	12,377.40	11,881.30	990.00	496.10	95.99
101-253-705.000	EMPLOYER FICA CONTRIB	3,674.39	3,409.16	303.02	265.23	92.78
101-253-727.000	TWP TREASURER OFFICE SUPPLIES	100.00	77.97	0.00	22.03	77.97
101-253-752.000	SUPPLIES/EQUIPMENT	500.00	263.21	0.00	236.79	52.64
101-253-802.000	PROF SERV SOFTW	4,250.00	1,887.00	0.00	2,363.00	44.40
101-253-815.000	EDUCATION/TRAINING	700.00	670.00	0.00	30.00	95.71
101-253-851.000	POSTAGE	4,300.00	4,746.05	0.00	(446.05)	110.37
101-253-860.000	TRAVEL EXPENSES	0.00	478.61	0.00	(478.61)	100.00
101-253-910.000	EDUCATION/TRAINING	950.00	1,332.00	0.00	(382.00)	140.21
101-253-913.000	TRAVEL	2,300.00	2,333.13	0.00	(33.13)	101.44
101-253-955.000	MISCELLANEOUS	550.00	675.75	0.00	(125.75)	122.86
Total Dept 253 - TREASURER		65,355.59	60,436.94	4,264.18	4,918.65	92.47
Dept 257 - ASSESSOR						
101-257-702.000	SALARIES & WAGES	54,680.85	50,123.31	4,556.66	4,557.54	91.67
101-257-705.000	EMPLOYER FICA CONTRIB	4,183.09	3,834.43	348.59	348.66	91.67
101-257-802.001	PROF SERVICES - ATTY	2,000.00	992.00	0.00	1,008.00	49.60
101-257-804.000	PROF SER SOFTWA	3,700.00	3,630.00	0.00	70.00	98.11
101-257-851.000	POSTAGE	1,435.00	1,434.74	0.00	0.26	99.98
101-257-955.000	MISCELLANEOUS	0.00	37.50	0.00	(37.50)	100.00

PERIOD ENDING 02/29/2024

GL NUMBER	DESCRIPTION	2023-24 AMENDED BUDGET	YTD BALANCE 02/29/2024 NORMAL (ABNORMAL)	ACTIVITY FOR MONTH 02/29/2024 INCREASE (DECREASE)	AVAILABLE BALANCE NORMAL (ABNORMAL)	% BDGT USED
Fund 101 - GENERAL FUND						
Expenditures						
Total Dept 257 - ASSESSOR		65,998.94	60,051.98	4,905.25	5,946.96	90.99
Dept 262 - ELECTION						
101-262-702.000	SALARIES & WAGES	8,268.75	1,800.00	1,800.00	6,468.75	21.77
101-262-705.000	EMPLOYER FICA CONTRIB	632.56	0.00	0.00	632.56	0.00
101-262-752.000	SUPPLIES/EQUIPMENT	6,000.00	2,637.70	1,755.95	3,362.30	43.96
101-262-801.000	ELECT SERV VILL	4,900.00	0.00	0.00	4,900.00	0.00
101-262-802.000	ELECT OTHER CON	250.00	0.00	0.00	250.00	0.00
101-262-803.000	ELECTION SOURCE - CONTRACTUAL	0.00	615.00	0.00	(615.00)	100.00
101-262-815.000	EDUCATION/TRAINING	2,000.00	0.00	0.00	2,000.00	0.00
101-262-851.000	POSTAGE	4,000.00	0.00	0.00	4,000.00	0.00
101-262-860.000	TRAVEL EXPENSES	0.00	0.00	0.00	0.00	0.00
101-262-910.000	EDUCATION/TRAINING	2,000.00	0.00	0.00	2,000.00	0.00
101-262-913.000	TRAVEL	500.00	47.81	0.00	452.19	9.56
101-262-955.000	MISCELLANEOUS	1,750.00	459.77	122.60	1,290.23	26.27
Total Dept 262 - ELECTION		30,301.31	5,560.28	3,678.55	24,741.03	18.35
Dept 265 - TOWNSHIP						
101-265-705.000	EMPLOYER FICA CONTRIB	449.82	454.86	41.40	(5.04)	101.12
101-265-706.000	CUSTODIAL WAGES	5,880.00	5,945.88	541.12	(65.88)	101.12
101-265-727.000	TWP OFFICE SUPPLIES	800.00	889.27	0.00	(89.27)	111.16
101-265-752.000	SUPPLIES/EQUIPMENT	6,000.00	5,685.56	558.38	314.44	94.76
101-265-802.000	PROF SERV SOFTWARE	5,550.00	4,835.91	0.00	714.09	87.13
101-265-804.000	PROF SERV-ATTOR	10,000.00	8,325.88	157.50	1,674.12	83.26
101-265-805.000	PROF SERV-AUDIT	5,500.00	7,488.00	650.00	(1,988.00)	136.15
101-265-806.000	OTHER SERVICES	2,100.00	156.05	0.00	1,943.95	7.43
101-265-806.001	PROF SERV INFO	6,250.00	4,741.16	0.00	1,508.84	75.86
101-265-807.000	PROF SERV WEB	1,000.00	565.00	0.00	435.00	56.50
101-265-808.000	BUOYS	350.00	83.05	0.00	266.95	23.73
101-265-809.000	OTHER SERVICES	0.00	0.00	0.00	0.00	0.00
101-265-815.000	EDUCATION/TRAINING	0.00	0.00	0.00	0.00	0.00
101-265-828.000	BANK FEES	1,600.00	951.00	0.00	649.00	59.44
101-265-829.000	PERMITS	40.00	40.00	0.00	0.00	100.00
101-265-850.000	UTIL PH/INTERNE	4,000.00	3,162.79	125.74	837.21	79.07
101-265-851.000	POSTAGE	3,200.00	1,198.26	74.00	2,001.74	37.45
101-265-854.000	COPYING	3,000.00	3,181.16	0.00	(181.16)	106.04
101-265-855.000	OTHER SER/CHGS	2,400.00	2,169.93	141.60	230.07	90.41
101-265-860.000	TRAVEL EXPENSES	100.00	0.00	0.00	100.00	0.00
101-265-900.000	PRINT/PUBLISH	3,000.00	2,346.80	168.50	653.20	78.23
101-265-900.001	PRINT/PUB NOTIC	1,200.00	754.35	0.00	445.65	62.86
101-265-910.000	EDUCATION/TRAINING	1,000.00	0.00	0.00	1,000.00	0.00
101-265-913.000	TRAVEL	0.00	0.00	0.00	0.00	0.00
101-265-915.000	MEMBER/DUES	6,000.00	5,474.61	374.00	525.39	91.24
101-265-915.001	MEM/DUES MML	250.00	200.00	0.00	50.00	80.00
101-265-915.002	MEM/DUES OTHER	500.00	0.00	0.00	500.00	0.00
101-265-920.000	UTILITIES	7,400.00	5,026.68	254.09	2,373.32	67.93
101-265-930.000	REP/MAIN BRINE	0.00	0.00	0.00	0.00	0.00
101-265-931.000	REP/MAINT BUILDING	11,000.00	11,067.00	100.00	(67.00)	100.61
101-265-932.000	REP/MAIN MOW/SN	2,000.00	2,326.00	954.00	(326.00)	116.30
101-265-933.000	WEB	0.00	0.00	0.00	0.00	0.00
101-265-934.000	REP/MAIN CUSTOD	500.00	0.00	0.00	500.00	0.00
101-265-934.003	REP/MAIN MISC	4,600.00	275.00	0.00	4,325.00	5.98
101-265-935.000	INSURANCE/BONDS	10,050.00	10,270.00	0.00	(220.00)	102.19

PERIOD ENDING 02/29/2024

GL NUMBER	DESCRIPTION	2023-24 AMENDED BUDGET	YTD BALANCE 02/29/2024 NORMAL (ABNORMAL)	ACTIVITY FOR MONTH 02/29/2024 INCREASE (DECREASE)	AVAILABLE BALANCE NORMAL (ABNORMAL)	% BDGT USED
Fund 101 - GENERAL FUND						
Expenditures						
101-265-937.000	WORK COMP	1,500.00	1,123.50	0.00	376.50	74.90
101-265-940.000	COPY MACH RENT	1,500.00	917.76	117.52	582.24	61.18
101-265-940.001	POST MACH RENT	500.00	170.52	0.00	329.48	34.10
101-265-941.000	CONTIGENCY	0.00	0.00	0.00	0.00	0.00
101-265-955.000	MISCELLANEOUS	2,000.00	1,943.35	0.00	56.65	97.17
101-265-970.000	CAP OUT-COMPUTE	2,500.00	0.00	0.00	2,500.00	0.00
101-265-970.002	CAP OUT-BLDG	1,000.00	0.00	0.00	1,000.00	0.00
101-265-970.003	CAP OUT OTHER	14,960.00	0.00	0.00	14,960.00	0.00
101-265-970.004	CAP OUT BLD REP	3,000.00	0.00	0.00	3,000.00	0.00
101-265-991.100	DEBT SERVICE	0.00	0.00	0.00	0.00	0.00
101-265-995.000	TRANSFERS OUT	6,200.00	0.00	0.00	6,200.00	0.00
Total Dept 265 - TOWNSHIP		138,879.82	91,769.33	4,257.85	47,110.49	66.08
Dept 445 - DRAIN						
101-445-875.000	AT LARGE DRAINAGE ASSESSMENT	0.00	0.00	0.00	0.00	0.00
Total Dept 445 - DRAIN		0.00	0.00	0.00	0.00	0.00
Dept 526 - TRANSFER STATION						
101-526-702.000	SALARIES & WAGES	14,120.40	11,542.00	0.00	2,578.40	81.74
101-526-705.000	EMPLOYER FICA CONTRIB	1,080.21	882.97	0.00	197.24	81.74
101-526-752.000	SUPPLIES/EQUIPMENT	300.00	268.15	0.00	31.85	89.38
101-526-802.000	CONTRACTUAL SER	0.00	0.00	0.00	0.00	0.00
101-526-900.000	PRINT/PUBLISH	0.00	0.00	0.00	0.00	0.00
101-526-934.000	REP/MAINT	6,500.00	6,465.00	0.00	35.00	99.46
101-526-940.000	RENTALS	22,400.00	24,953.60	0.00	(2,553.60)	111.40
101-526-940.001	EQUIP RENT/JONS	1,000.00	802.52	0.00	197.48	80.25
101-526-956.000	MISCELLANEOUS	100.00	110.98	72.60	(10.98)	110.98
101-526-964.000	REFUNDS	0.00	0.00	0.00	0.00	0.00
Total Dept 526 - TRANSFER STATION		45,500.61	45,025.22	72.60	475.39	98.96
Dept 527 - SEWER-UTILITIES						
101-527-802.000	CONTRACT SERVICES	0.00	0.00	0.00	0.00	0.00
101-527-829.000	PERMITS	0.00	0.00	0.00	0.00	0.00
101-527-851.000	POSTAGE	0.00	0.00	0.00	0.00	0.00
101-527-920.000	UTILITIES	0.00	0.00	0.00	0.00	0.00
101-527-932.000	REPAIR/MAINT	0.00	0.00	0.00	0.00	0.00
101-527-955.000	MISCELLANEOUS	0.00	0.00	0.00	0.00	0.00
101-527-970.000	SEW/LAND CAP OU	0.00	0.00	0.00	0.00	0.00
Total Dept 527 - SEWER-UTILITIES		0.00	0.00	0.00	0.00	0.00
Dept 597 - DOC/RECREATION/PLIB						
101-597-802.000	CONT SER DOCK	700.00	700.00	0.00	0.00	100.00
101-597-804.000	CONT SERV REC	7,500.00	7,500.00	0.00	0.00	100.00
101-597-804.100	PARK PLACE	7,500.00	7,500.00	0.00	0.00	100.00
101-597-804.200	NORTHEND PARK	0.00	0.00	0.00	0.00	0.00
101-597-805.000	CONT SERV PLIB	6,350.00	6,350.00	0.00	0.00	100.00
101-597-934.000	REP/MAIN BOAT	5,500.00	5,497.29	0.00	2.71	99.95
101-597-955.000	MISCELLANEOUS	450.00	350.00	0.00	100.00	77.78

PERIOD ENDING 02/29/2024

GL NUMBER	DESCRIPTION	2023-24 AMENDED BUDGET	YTD BALANCE 02/29/2024 NORMAL (ABNORMAL)	ACTIVITY FOR MONTH 02/29/2024 INCREASE (DECREASE)	AVAILABLE BALANCE NORMAL (ABNORMAL)	% BDGT USED
Fund 101 - GENERAL FUND						
Expenditures						
Total Dept 597 - DOC/RECREATION/PLIB		28,000.00	27,897.29	0.00	102.71	99.63
Dept 701 - PLANNING COMMISSION						
101-701-702.000	FROM	3,310.00	3,737.22	351.01	(427.22)	112.91
101-701-705.000	EMPLOYER FICA CONTRIB	176.72	285.86	26.86	(109.14)	161.76
101-701-802.000	PROF SERV ATTORNEY	1,900.00	1,852.50	0.00	47.50	97.50
101-701-804.000	PROF SERV CONSULTANT	500.00	0.00	0.00	500.00	0.00
101-701-805.000	MASTER PLAN UPDATE	900.00	812.55	0.00	87.45	90.28
101-701-812.000	RECORDING SECRETARY	375.00	0.00	0.00	375.00	0.00
101-701-815.000	EDUCATION/TRAINING	0.00	0.00	0.00	0.00	0.00
101-701-851.000	POSTAGE	0.00	0.00	0.00	0.00	0.00
101-701-860.000	TRAVEL EXPENSES	0.00	0.00	0.00	0.00	0.00
101-701-900.000	NEWSPAPER PUBLICATIONS	700.00	652.00	0.00	48.00	93.14
101-701-910.000	EDUCATION/TRAINING	100.00	0.00	0.00	100.00	0.00
101-701-913.000	TRAVEL/EXPENSES	100.00	0.00	0.00	100.00	0.00
101-701-955.000	MISCELLANEOUS	0.00	0.00	0.00	0.00	0.00
101-701-964.000	REFUNDS	100.00	0.00	0.00	100.00	0.00
Total Dept 701 - PLANNING COMMISSION		8,161.72	7,340.13	377.87	821.59	89.93
Dept 702 - ZONING ADMINISTRATION						
101-702-005.000	ZBA FRINGES	0.00	0.00	0.00	0.00	0.00
101-702-702.000	SALARIES & WAGES	25,520.27	22,112.80	1,927.66	3,407.47	86.65
101-702-702.001	DEPUTY WAGES	0.00	0.00	0.00	0.00	0.00
101-702-703.000	HEARING OFFICER WAGES	210.00	0.00	0.00	210.00	0.00
101-702-705.000	EMPLOYER FICA CONTRIB	1,968.37	1,696.57	147.47	271.80	86.19
101-702-752.000	SUPPLIES/EQUIPMENT	30.00	0.00	0.00	30.00	0.00
101-702-802.000	PROF SERVICES	10,700.00	982.14	0.00	9,717.86	9.18
101-702-802.001	PROF SER ATTY	4,300.00	5,161.50	0.00	(861.50)	120.03
101-702-804.000	PROF SERV CONSU	0.00	0.00	0.00	0.00	0.00
101-702-812.000	REC SECRETARY	0.00	64.93	0.00	(64.93)	100.00
101-702-815.000	EDUCATION/TRAINING	0.00	0.00	0.00	0.00	0.00
101-702-860.000	TRAVEL EXPENSES	0.00	0.00	0.00	0.00	0.00
101-702-880.000	ADVERTISING-ZON	0.00	0.00	0.00	0.00	0.00
101-702-900.000	PRINT/PUBLISH	600.00	340.60	134.80	259.40	56.77
101-702-910.000	EDUCATION/TRAINING	150.00	0.00	0.00	150.00	0.00
101-702-913.000	TRAVEL	100.00	0.00	0.00	100.00	0.00
101-702-955.000	MISCELLANEOUS	0.00	37.50	0.00	(37.50)	100.00
101-702-964.000	REFUNDS	200.00	0.00	0.00	200.00	0.00
Total Dept 702 - ZONING ADMINISTRATION		43,778.64	30,396.04	2,209.93	13,382.60	69.43
Dept 703 - ZONING BOARD OF APPEALS						
101-703-702.000	SALARIES & WAGES	703.50	457.24	0.00	246.26	65.00
101-703-705.000	EMPLOYER FICA CONTRIB	53.82	34.98	0.00	18.84	64.99
101-703-802.000	PROF SERV ATTY	750.00	103.50	0.00	646.50	13.80
101-703-815.000	EDUCATION/TRAINING	0.00	0.00	0.00	0.00	0.00
101-703-860.000	TRAVEL EXPENSES	0.00	0.00	0.00	0.00	0.00
101-703-900.000	PRINT/PUBLISH	600.00	1,011.50	0.00	(411.50)	168.58
101-703-910.000	EDUCATION/TRAINING	450.00	450.00	0.00	0.00	100.00
101-703-913.000	TRAVEL	100.00	0.00	0.00	100.00	0.00
101-703-955.000	MISCELLANEOUS	30.00	95.00	0.00	(65.00)	316.67

PERIOD ENDING 02/29/2024

GL NUMBER	DESCRIPTION	2023-24 AMENDED BUDGET	YTD BALANCE 02/29/2024 NORMAL (ABNORMAL)	ACTIVITY FOR MONTH 02/29/2024 INCREASE (DECREASE)	AVAILABLE BALANCE NORMAL (ABNORMAL)	% BDGT USED
Fund 101 - GENERAL FUND						
Expenditures						
101-703-964.000	REFUNDS	400.00	0.00	0.00	400.00	0.00
Total Dept 703 - ZONING BOARD OF APPEALS		3,087.32	2,152.22	0.00	935.10	69.71
TOTAL EXPENDITURES		556,901.24	449,307.19	28,457.99	107,594.05	80.68
Fund 101 - GENERAL FUND:						
TOTAL REVENUES		556,901.23	433,434.28	88,867.07	123,466.95	77.83
TOTAL EXPENDITURES		556,901.24	449,307.19	28,457.99	107,594.05	80.68
NET OF REVENUES & EXPENDITURES		(0.01)	(15,872.91)	60,409.08	15,872.90	158,729,

REVENUE AND EXPENDITURE REPORT FOR PENTWATER TOWNSHIP

PERIOD ENDING 02/29/2024

GL NUMBER	DESCRIPTION	2023-24 AMENDED BUDGET	YTD BALANCE 02/29/2024 NORMAL (ABNORMAL)	ACTIVITY FOR MONTH 02/29/2024 INCREASE (DECREASE)	AVAILABLE BALANCE NORMAL (ABNORMAL)	% BDGT USED
Fund 204 - ROAD FUND						
Revenues						
Dept 000						
204-000-402.000	CURRENT REAL PR	122,000.00	84,472.38	28,582.29	37,527.62	69.24
204-000-405.000	TAX AD FEE	0.00	0.00	0.00	0.00	0.00
204-000-411.000	DEL REAL P TAX	0.00	4,334.27	0.00	(4,334.27)	100.00
204-000-573.000	LOCAL COMMUNITY STABILIZATION SHARE	0.00	0.00	0.00	0.00	0.00
204-000-664.000	INTEREST INCOME	643.32	6,094.10	744.29	(5,450.78)	947.29
204-000-699.000	TRANSFER IN	6,200.00	0.00	0.00	6,200.00	0.00
Total Dept 000		128,843.32	94,900.75	29,326.58	33,942.57	73.66
TOTAL REVENUES		128,843.32	94,900.75	29,326.58	33,942.57	73.66
Expenditures						
Dept 000						
204-000-702.000	SALARIES & WAGES	1,517.25	1,114.97	0.00	402.28	73.49
204-000-705.000	EMPLOYER FICA CONTRIB	116.07	85.30	0.00	30.77	73.49
204-000-805.000	PROF SERV-AUDIT	560.00	0.00	0.00	560.00	0.00
204-000-855.000	OTHER SER/CHGS	0.00	0.00	0.00	0.00	0.00
204-000-930.000	REP/MAIN BRINE	8,300.00	8,287.50	0.00	12.50	99.85
204-000-934.002	REP/MAIN INTERI	118,350.00	118,332.43	0.00	17.57	99.99
204-000-955.000	MISCELLANEOUS	0.00	0.00	0.00	0.00	0.00
Total Dept 000		128,843.32	127,820.20	0.00	1,023.12	99.21
TOTAL EXPENDITURES		128,843.32	127,820.20	0.00	1,023.12	99.21
Fund 204 - ROAD FUND:						
TOTAL REVENUES		128,843.32	94,900.75	29,326.58	33,942.57	73.66
TOTAL EXPENDITURES		128,843.32	127,820.20	0.00	1,023.12	99.21
NET OF REVENUES & EXPENDITURES		0.00	(32,919.45)	29,326.58	32,919.45	100.00

REVENUE AND EXPENDITURE REPORT FOR PENTWATER TOWNSHIP

PERIOD ENDING 02/29/2024

GL NUMBER	DESCRIPTION	2023-24 AMENDED BUDGET	YTD BALANCE 02/29/2024 NORMAL (ABNORMAL)	ACTIVITY FOR MONTH 02/29/2024 INCREASE (DECREASE)	AVAILABLE BALANCE NORMAL (ABNORMAL)	% BDGT USED
Fund 206 - FIRE FUND						
Revenues						
Dept 000						
206-000-401.000	FROM PREV YEAR-END	50,991.84	0.00	0.00	50,991.84	0.00
206-000-402.000	CURR REAL P TAX	242,150.93	167,777.30	56,769.62	74,373.63	69.29
206-000-402.100	CURR PROP TAX - EQUIPMENT	121,924.73	84,472.38	28,582.29	37,452.35	69.28
206-000-411.000	DEL REAL P TAX	0.00	8,608.86	0.00	(8,608.86)	100.00
206-000-411.100	DEL REAL TX FIRE APPARTUS	0.00	4,334.27	0.00	(4,334.27)	100.00
206-000-552.001	STATE GRANTS FIRE	3,500.00	3,500.00	0.00	0.00	100.00
206-000-573.000	LOCAL COMMUNITY STABILIZATION SHARE	0.00	0.00	0.00	0.00	0.00
206-000-573.100	LOCAL COMMUNITY STABILIZATION SHARE EQU	0.00	0.00	0.00	0.00	0.00
206-000-664.000	INTEREST INCOME	0.00	9,867.40	1,293.07	(9,867.40)	100.00
206-000-671.000	MISCELLANEOUS	0.00	21,417.15	19,625.23	(21,417.15)	100.00
206-000-674.000	DONATIONS	0.00	3,500.00	0.00	(3,500.00)	100.00
206-000-676.009	MFR REIMBURSE	27,000.00	56,760.00	0.00	(29,760.00)	210.22
206-000-699.000	TRANSFER IN	0.00	0.00	0.00	0.00	0.00
Total Dept 000		445,567.50	360,237.36	106,270.21	85,330.14	80.85
TOTAL REVENUES		445,567.50	360,237.36	106,270.21	85,330.14	80.85
Expenditures						
Dept 000						
206-000-955.000	MISCELLANEOUS	0.00	0.00	0.00	0.00	0.00
206-000-995.000	TRANSFERS OUT	0.00	0.00	0.00	0.00	0.00
Total Dept 000		0.00	0.00	0.00	0.00	0.00
Dept 336 - FIRE						
206-336-702.000	SALARIES & WAGES	95,000.00	62,786.50	352.50	32,213.50	66.09
206-336-702.002	SALARIES $ WAGES FIRE 2	0.00	0.00	0.00	0.00	0.00
206-336-703.000	PAYROLL EXPENSE	0.00	0.00	0.00	0.00	0.00
206-336-705.000	EMPLOYER FICA CONTRIB	7,267.50	4,860.58	26.97	2,406.92	66.88
206-336-721.000	UNIFORMS	4,500.00	3,830.55	0.00	669.45	85.12
206-336-725.000	MUTA EXPENSE	300.00	0.00	0.00	300.00	0.00
206-336-752.000	SUPPLIES/EQUIPMENT	17,000.00	12,151.77	713.34	4,848.23	71.48
206-336-800.000	PROF/CONTRACT SERVICES	1,700.00	274.50	0.00	1,425.50	16.15
206-336-802.000	PROF SERVICES - SOFTWARE	1,300.00	1,277.67	0.00	22.33	98.28
206-336-805.000	PROF SERV-AUDIT	600.00	0.00	0.00	600.00	0.00
206-336-828.000	BANK FEES	500.00	385.00	35.00	115.00	77.00
206-336-851.000	POSTAGE	300.00	225.35	0.00	74.65	75.12
206-336-855.000	OTHER SER/CHGS	0.00	(89.23)	0.00	89.23	100.00
206-336-880.000	COMM PROMOTION	1,500.00	1,631.19	0.00	(131.19)	108.75
206-336-900.000	PRINT/PUBLISH	1,000.00	0.00	0.00	1,000.00	0.00
206-336-910.000	EDUCATION/TRAINING	2,000.00	2,412.57	112.57	(412.57)	120.63
206-336-913.000	TRAVEL	5,000.00	4,374.78	136.20	625.22	87.50
206-336-915.000	MEMBER/DUES	500.00	75.00	0.00	425.00	15.00
206-336-920.000	UTILITIES	14,000.00	13,064.47	1,938.23	935.53	93.32
206-336-931.000	REP/MAINT	37,090.00	28,600.43	677.19	8,489.57	77.11
206-336-935.000	INSURANCE	27,510.00	27,509.60	0.00	0.40	100.00
206-336-940.000	RENTALS	0.00	0.00	0.00	0.00	0.00
206-336-940.001	HYDRANT RENTALS	0.00	0.00	0.00	0.00	0.00
206-336-941.000	CONTINGENCY	2,000.00	0.00	0.00	2,000.00	0.00
206-336-955.000	MISCELLANEOUS	1,100.00	1,868.85	749.63	(768.85)	169.90
206-336-968.000	DEPRECIATION AND DEPLETION	0.00	0.00	0.00	0.00	0.00
206-336-968.001	LOSS ON DISPOSAL CAPITAL ASSET	0.00	0.00	0.00	0.00	0.00

REVENUE AND EXPENDITURE REPORT FOR PENTWATER TOWNSHIP

PERIOD ENDING 02/29/2024

GL NUMBER	DESCRIPTION	2023-24 AMENDED BUDGET	YTD BALANCE 02/29/2024 NORMAL (ABNORMAL)	ACTIVITY FOR MONTH 02/29/2024 INCREASE (DECREASE)	AVAILABLE BALANCE NORMAL (ABNORMAL)	% BDGT USED
Fund 206 - FIRE FUND						
Expenditures						
206-336-970.000	CAPITAL OUTLAY	101,300.00	101,289.05	0.00	10.95	99.99
206-336-991.000	DEBT SERVICE	0.00	1,770.59	0.00	(1,770.59)	100.00
206-336-991.100	DEBT SERVICE - PRINCIPAL	120,000.00	119,333.33	0.00	666.67	99.44
206-336-991.200	DEBT SERVICE - INTEREST	4,100.00	2,267.34	0.00	1,832.66	55.30
Total Dept 336 - FIRE		445,567.50	389,899.89	4,741.63	55,667.61	87.51
TOTAL EXPENDITURES		445,567.50	389,899.89	4,741.63	55,667.61	87.51
Fund 206 - FIRE FUND:						
TOTAL REVENUES		445,567.50	360,237.36	106,270.21	85,330.14	80.85
TOTAL EXPENDITURES		445,567.50	389,899.89	4,741.63	55,667.61	87.51
NET OF REVENUES & EXPENDITURES		0.00	(29,662.53)	101,528.58	29,662.53	100.00

PERIOD ENDING 02/29/2024

GL NUMBER	DESCRIPTION	2023-24 AMENDED BUDGET	YTD BALANCE 02/29/2024 NORMAL (ABNORMAL)	ACTIVITY FOR MONTH 02/29/2024 INCREASE (DECREASE)	AVAILABLE BALANCE NORMAL (ABNORMAL)	% BDGT USED
Fund 209 - CEMETERY FUND						
Revenues						
Dept 000						
209-000-401.000	PAR PREV YE BAL	13,066.08	0.00	0.00	13,066.08	0.00
209-000-402.000	CURR PROP TAX	83,720.17	58,000.74	19,625.23	25,719.43	69.28
209-000-411.000	DEL REAL PP TAX	0.00	2,975.85	0.00	(2,975.85)	100.00
209-000-573.000	LOCAL COMMUNITY STABILIZATION SHARE	0.00	0.00	0.00	0.00	0.00
209-000-607.000	SERV RENDERED	0.00	0.00	0.00	0.00	0.00
209-000-626.000	INTERMENT FEES	3,000.00	2,100.00	300.00	900.00	70.00
209-000-644.000	CEMETERY FOUNDATION	0.00	2,528.00	338.00	(2,528.00)	100.00
209-000-645.000	LOT SALES	10,700.00	2,300.00	0.00	8,400.00	21.50
209-000-646.000	COLUM SALES	6,300.00	9,365.00	0.00	(3,065.00)	148.65
209-000-647.000	SCAT GAR BRICK	300.00	0.00	0.00	300.00	0.00
209-000-664.000	INTEREST INCOME	100.00	10,545.93	1,214.60	(10,445.93)	10,545.9
209-000-671.000	OTHER INCOME	2,400.00	101,575.91	97,411.91	(99,175.91)	4,232.33
209-000-672.001	VENDOR REFUNDS	0.00	0.00	0.00	0.00	0.00
209-000-699.000	TRANSFER IN	0.00	0.00	0.00	0.00	0.00
Total Dept 000		119,586.25	189,391.43	118,889.74	(69,805.18)	158.37
TOTAL REVENUES		119,586.25	189,391.43	118,889.74	(69,805.18)	158.37
Expenditures						
Dept 567 - CEMETERY						
209-567-702.000	SALARIES & WAGES	17,890.95	17,900.90	1,824.32	(9.95)	100.06
209-567-704.000	ASSIST BURIALS	0.00	0.00	0.00	0.00	0.00
209-567-704.001	CEMETERY ASSISTANT	3,000.00	2,766.92	0.00	233.08	92.23
209-567-705.000	EMPLOYER FICA CONTRIB	3,000.00	1,606.58	139.56	1,393.42	53.55
209-567-727.000	TWP OFFICE SUPPLIES	0.00	0.00	0.00	0.00	0.00
209-567-752.000	SUPPLIES/EQUIPMENT	5,300.00	5,256.95	0.00	43.05	99.19
209-567-801.000	PROF SERV-ATTOR	1,700.00	1,693.50	0.00	6.50	99.62
209-567-802.000	PRO SERV SOFTWA	2,100.00	1,962.67	0.00	137.33	93.46
209-567-804.000	PROF SERV MAP	250.00	0.00	0.00	250.00	0.00
209-567-805.000	PRO SERV AUDIT	400.00	0.00	0.00	400.00	0.00
209-567-806.000	COLUM PLAQUES	2,500.00	3,413.00	256.00	(913.00)	136.52
209-567-807.000	BRICK ENGRAVING	300.00	0.00	0.00	300.00	0.00
209-567-810.000	FOUNDATION EXP	1,750.00	1,801.67	0.00	(51.67)	102.95
209-567-828.000	BANK FEES	420.00	567.00	185.00	(147.00)	135.00
209-567-830.008	ADMIN EXPENSE	6,760.00	0.00	0.00	6,760.00	0.00
209-567-851.000	POSTAGE	0.00	44.53	0.00	(44.53)	100.00
209-567-855.000	OTHER SER/CHGS	0.00	(6.53)	0.00	6.53	100.00
209-567-900.000	PRINT/PUBLISH	300.00	238.50	0.00	61.50	79.50
209-567-910.000	EDUCATION/TRAINING	0.00	160.00	0.00	(160.00)	100.00
209-567-913.000	TRAVEL	0.00	381.47	0.00	(381.47)	100.00
209-567-915.000	MEMBER/DUES	0.00	660.00	0.00	(660.00)	100.00
209-567-920.000	UTILITIES	3,200.00	3,722.28	547.90	(522.28)	116.32
209-567-928.000	REFUNDS	2,000.00	400.00	0.00	1,600.00	20.00
209-567-930.000	REP/MAINT BLDGS	500.00	0.00	0.00	500.00	0.00
209-567-930.001	REP/MAINT GROUN	10,500.00	9,556.00	0.00	944.00	91.01
209-567-931.000	REP/MAINT EQUIP	2,000.00	112.80	0.00	1,887.20	5.64
209-567-931.001	REP/MAINT IRRIG	9,000.00	2,467.11	0.00	6,532.89	27.41
209-567-935.000	INSURANCE	2,500.00	4,368.50	2,067.00	(1,868.50)	174.74
209-567-941.000	CONTINGENCY	0.00	0.00	0.00	0.00	0.00
209-567-955.000	MISCELLANEOUS	1,300.00	51.01	0.00	1,248.99	3.92
209-567-970.000	CAPITAL OUTLAY	42,915.30	0.00	0.00	42,915.30	0.00

PERIOD ENDING 02/29/2024

GL NUMBER DESCRIPTION	2023-24 AMENDED BUDGET	YTD BALANCE 02/29/2024 NORMAL (ABNORMAL)	ACTIVITY FOR MONTH 02/29/2024 INCREASE (DECREASE)	AVAILABLE BALANCE NORMAL (ABNORMAL)	% BDGT USED
Fund 209 - CEMETERY FUND					
Expenditures					
Total Dept 567 - CEMETERY	119,586.25	59,124.86	5,019.78	60,461.39	49.44
TOTAL EXPENDITURES	119,586.25	59,124.86	5,019.78	60,461.39	49.44
Fund 209 - CEMETERY FUND:					
TOTAL REVENUES	119,586.25	189,391.43	118,889.74	(69,805.18)	158.37
TOTAL EXPENDITURES	119,586.25	59,124.86	5,019.78	60,461.39	49.44
NET OF REVENUES & EXPENDITURES	0.00	130,266.57	113,869.96	(130,266.57)	100.00

PERIOD ENDING 02/29/2024

GL NUMBER	DESCRIPTION	2023-24 AMENDED BUDGET	YTD BALANCE 02/29/2024 NORMAL (ABNORMAL)	ACTIVITY FOR MONTH 02/29/2024 INCREASE (DECREASE)	AVAILABLE BALANCE NORMAL (ABNORMAL)	% BDGT USED
Fund 286 - AMERICAN RESCUE PLAN						
Revenues						
Dept 000						
286-000-401.000	PREV YEAR-END	0.00	0.00	0.00	0.00	0.00
286-000-528.000	FEDERAL GRANTS - OTHER	67,017.00	0.00	0.00	67,017.00	0.00
286-000-665.000	INTEREST	0.00	3,487.74	312.38	(3,487.74)	100.00
286-000-666.000	DIVIDENDS	0.00	0.00	0.00	0.00	0.00
286-000-699.000	INTERFUND TRANSFERS IN	0.00	0.00	0.00	0.00	0.00
Total Dept 000		67,017.00	3,487.74	312.38	63,529.26	5.20
TOTAL REVENUES		67,017.00	3,487.74	312.38	63,529.26	5.20
Expenditures						
Dept 000						
286-000-802.000	EXPENDITURES	67,017.00	0.00	0.00	67,017.00	0.00
286-000-821.000	OTHER CONTRACTUAL SERVICES	0.00	0.00	0.00	0.00	0.00
286-000-977.000	MACHINERY & EQUIPMENT	0.00	0.00	0.00	0.00	0.00
286-000-984.000	SOFTWARE	0.00	0.00	0.00	0.00	0.00
286-000-995.000	TRANSFERS OUT	0.00	0.00	0.00	0.00	0.00
Total Dept 000		67,017.00	0.00	0.00	67,017.00	0.00
TOTAL EXPENDITURES		67,017.00	0.00	0.00	67,017.00	0.00
Fund 286 - AMERICAN RESCUE PLAN:						
TOTAL REVENUES		67,017.00	3,487.74	312.38	63,529.26	5.20
TOTAL EXPENDITURES		67,017.00	0.00	0.00	67,017.00	0.00
NET OF REVENUES & EXPENDITURES		0.00	3,487.74	312.38	(3,487.74)	100.00

GL NUMBER	DESCRIPTION	2023-24 AMENDED BUDGET	YTD BALANCE 02/29/2024 NORMAL (ABNORMAL)	ACTIVITY FOR MONTH 02/29/2024 INCREASE (DECREASE)	AVAILABLE BALANCE NORMAL (ABNORMAL)	% BDGT USED
Fund 592 - SEWER FUND						
Revenues						
Dept 000						
592-000-488.000	UTILITY BILLING REVENUE	0.00	0.00	0.00	0.00	0.00
592-000-501.000	FEDERAL GRANTS - GENERAL	0.00	0.00	0.00	0.00	0.00
592-000-552.000	STATE GRANTS - SANITATION	0.00	0.00	0.00	0.00	0.00
592-000-580.000	OTHER GRANTS	0.00	0.00	0.00	0.00	0.00
592-000-608.000	SEWER CONNECTION FEES	0.00	0.00	0.00	0.00	0.00
592-000-610.000	LATE FEES	0.00	0.00	0.00	0.00	0.00
592-000-642.000	TWP. SEWER SALES	128,500.00	99,411.43	0.00	29,088.57	77.36
592-000-656.000	PENALTIES	1,000.00	737.48	219.54	262.52	73.75
592-000-664.000	INTEREST INCOME	0.00	0.00	0.00	0.00	0.00
592-000-671.000	MISCELLANEOUS	0.00	0.00	0.00	0.00	0.00
592-000-672.001	VENDOR REFUNDS	0.00	0.00	0.00	0.00	0.00
592-000-699.000	TRANSFER IN	124,000.00	0.00	0.00	124,000.00	0.00
Total Dept 000		253,500.00	100,148.91	219.54	153,351.09	39.51
TOTAL REVENUES		253,500.00	100,148.91	219.54	153,351.09	39.51
Expenditures						
Dept 538 - SHARED N&S SEWER EXPENDITURES						
592-538-752.000	SUPPLIES/EQUIPMENT	0.00	4,751.43	0.00	(4,751.43)	100.00
592-538-804.000	PROF SER SOFTWA	0.00	600.00	600.00	(600.00)	100.00
592-538-829.000	STATE PERMITS	3,000.00	1,800.00	1,800.00	1,200.00	60.00
592-538-830.001	UTILITY LOCATING SERVICES	5,000.00	0.00	0.00	5,000.00	0.00
592-538-830.002	ENGINEERING SERVICES	26,600.00	25,066.94	4,153.75	1,533.06	94.24
592-538-830.003	OPERATION SERVICES	36,000.00	34,197.74	5,341.02	1,802.26	94.99
592-538-830.004	FINANCIAL CONSULTANT SERVICES	15,000.00	0.00	0.00	15,000.00	0.00
592-538-830.005	LEGAL SERVICES	15,000.00	14,959.00	968.50	41.00	99.73
592-538-830.006	AUDITOR SERVICES	2,000.00	0.00	0.00	2,000.00	0.00
592-538-830.008	ADMIN EXPENSE	15,000.00	6,860.00	0.00	8,140.00	45.73
592-538-851.100	POSTAGE - SEWER	400.00	147.00	0.00	253.00	36.75
592-538-855.000	OTHER SER/CHGS	0.00	2,590.65	0.00	(2,590.65)	100.00
592-538-995.000	TRANSFERS OUT	0.00	0.00	0.00	0.00	0.00
Total Dept 538 - SHARED N&S SEWER EXPENDITURES		118,000.00	90,972.76	12,863.27	27,027.24	77.10
Dept 539 - SHARED N&S SEWER ADMINISTRATION						
592-539-702.000	SALARIES & WAGES	15,000.00	2,211.93	423.32	12,788.07	14.75
592-539-705.000	EMPLOYER FICA CONTRIB	1,147.50	246.07	32.39	901.43	21.44
592-539-830.007	LIABILITY INSURANCE - SEWER	2,500.00	4,524.00	2,327.00	(2,024.00)	180.96
592-539-915.000	MEMBER/DUES	0.00	0.00	0.00	0.00	0.00
592-539-955.000	MISCELLANEOUS	0.00	334.79	0.00	(334.79)	100.00
592-539-968.100	EQUIPMENT DEPRECIATION	20,000.00	0.00	0.00	20,000.00	0.00
592-539-970.006	CAPITAL OUTLAY - SEWER	2,852.50	0.00	0.00	2,852.50	0.00
592-539-991.200	DEBT SERVICE - INTEREST	0.00	0.00	0.00	0.00	0.00
Total Dept 539 - SHARED N&S SEWER ADMINISTRATION		41,500.00	7,316.79	2,782.71	34,183.21	17.63
Dept 540 - TWP NORTH SEWER EXPENDITURES						
592-540-752.000	SUPPLIES/EQUIPMENT	10,000.00	9,830.23	0.00	169.77	98.30
592-540-800.000	PROF/CONTRACT SERVICES	5,000.00	0.00	0.00	5,000.00	0.00
592-540-920.000	UTILITIES	14,000.00	19,306.31	195.88	(5,306.31)	137.90

PERIOD ENDING 02/29/2024

GL NUMBER	DESCRIPTION	2023-24 AMENDED BUDGET	YTD BALANCE 02/29/2024 NORMAL (ABNORMAL)	ACTIVITY FOR MONTH 02/29/2024 INCREASE (DECREASE)	AVAILABLE BALANCE NORMAL (ABNORMAL)	% BDGT USED
Fund 592 - SEWER FUND						
Expenditures						
592-540-931.000	REP/MAINT	2,000.00	1,740.00	0.00	260.00	87.00
592-540-942.000	EQUIPMENT RENTAL	2,000.00	0.00	0.00	2,000.00	0.00
592-540-970.006	CAPITAL OUTLAY - SEWER	29,000.00	0.00	0.00	29,000.00	0.00
Total Dept 540 - TWP NORTH SEWER EXPENDITURES		62,000.00	30,876.54	195.88	31,123.46	49.80
Dept 541 - TWP SOUTH SEWER EXPENDITURES						
592-541-752.000	SUPPLIES/EQUIPMENT	3,100.00	3,072.54	0.00	27.46	99.11
592-541-800.000	PROF/CONTRACT SERVICES	5,000.00	2,000.00	2,000.00	3,000.00	40.00
592-541-920.000	UTILITIES	4,000.00	3,244.73	623.72	755.27	81.12
592-541-931.000	REP/MAINT	10,000.00	13,122.35	3,411.35	(3,122.35)	131.22
592-541-942.000	EQUIPMENT RENTAL	2,000.00	138.71	0.00	1,861.29	6.94
592-541-970.006	CAPITAL OUTLAY - SEWER	7,900.00	0.00	0.00	7,900.00	0.00
592-541-991.200	DEBT SERVICE - INTEREST	0.00	0.00	0.00	0.00	0.00
Total Dept 541 - TWP SOUTH SEWER EXPENDITURES		32,000.00	21,578.33	6,035.07	10,421.67	67.43
TOTAL EXPENDITURES		253,500.00	150,744.42	21,876.93	102,755.58	59.47
Fund 592 - SEWER FUND:						
TOTAL REVENUES		253,500.00	100,148.91	219.54	153,351.09	39.51
TOTAL EXPENDITURES		253,500.00	150,744.42	21,876.93	102,755.58	59.47
NET OF REVENUES & EXPENDITURES		0.00	(50,595.51)	(21,657.39)	50,595.51	100.00

PERIOD ENDING 02/29/2024

GL NUMBER	DESCRIPTION	2023-24 AMENDED BUDGET	YTD BALANCE 02/29/2024 NORMAL (ABNORMAL)	ACTIVITY FOR MONTH 02/29/2024 INCREASE (DECREASE)	AVAILABLE BALANCE NORMAL (ABNORMAL)	% BDGT USED
Fund 703 - CURRENT TAX COLLECTION FUND						
Revenues						
Dept 000						
703-000-410.000	CURRENT PERSONAL PROPERTY TAXES	0.00	0.00	0.00	0.00	0.00
703-000-411.000	DEL REAL PROPERTY TAX	0.00	0.00	0.00	0.00	0.00
703-000-412.000	DEL PERSONAL PROP TAX	0.00	0.00	0.00	0.00	0.00
703-000-672.000	TAX ACT MISC	0.00	22,143.61	1,296.00	(22,143.61)	100.00
703-000-675.000	REIMBURSEMENT TO TWP TAX ACCT	0.00	0.00	0.00	0.00	0.00
703-000-689.000	CASH OVER/SHORT	0.00	345.14	130.96	(345.14)	100.00
703-000-699.000	TRANSFER IN	0.00	0.00	0.00	0.00	0.00
Total Dept 000		0.00	22,488.75	1,426.96	(22,488.75)	100.00
TOTAL REVENUES		0.00	22,488.75	1,426.96	(22,488.75)	100.00
Expenditures						
Dept 000						
703-000-828.000	BANK FEES	0.00	580.00	0.00	(580.00)	100.00
703-000-828.001	MERCHANT PROCESSING FEE	0.00	55.00	0.00	(55.00)	100.00
Total Dept 000		0.00	635.00	0.00	(635.00)	100.00
TOTAL EXPENDITURES		0.00	635.00	0.00	(635.00)	100.00
Fund 703 - CURRENT TAX COLLECTION FUND:						
TOTAL REVENUES		0.00	22,488.75	1,426.96	(22,488.75)	100.00
TOTAL EXPENDITURES		0.00	635.00	0.00	(635.00)	100.00
NET OF REVENUES & EXPENDITURES		0.00	21,853.75	1,426.96	(21,853.75)	100.00
TOTAL REVENUES - ALL FUNDS		1,571,415.30	1,204,089.22	345,312.48	367,326.08	76.62
TOTAL EXPENDITURES - ALL FUNDS		1,571,415.31	1,177,531.56	60,096.33	393,883.75	74.93
NET OF REVENUES & EXPENDITURES		(0.01)	26,557.66	285,216.15	(26,557.67)	265,576,

INVOICE REGISTER REPORT FOR PENTWATER TOWNSHIP
POST DATES 02/09/2024 - 03/06/2024
BOTH JOURNALIZED AND UNJOURNALIZED OPEN AND PAID
BANK CODE: GFCKG

Inv Ref#	Vendor	Inv Date	Due Date	Inv Amt	Amt Due	Status	Jrnlized
2369	CHARTER COMMUNICATIONS	02/01/2024	02/09/2024	177.97	177.97	Open	N
2370	DTE ENERGY	02/05/2024	02/09/2024	171.76	171.76	Open	N
2371	FLEIS & VANDENBRINK	02/09/2024	02/09/2024	133.43	133.43	Open	N
2372	QUADIENT FINANCE USA INC	01/31/2024	02/09/2024	549.00	549.00	Open	N
2373	QUADIENT, INC	02/04/2024	02/09/2024	85.26	85.26	Open	N
2374	SHOTWELL SOLUTIONS LLC	02/09/2024	02/09/2024	590.00	590.00	Open	N
2380	LUDINGTON DAILY NEWS, OCEANA HERA	02/12/2024	02/13/2024	261.40	261.40	Open	N
2381	BS&A SOFTWARE	02/09/2024	02/13/2024	1,202.00	1,202.00	Open	N
2382	CONSUMERS CREDIT UNION	01/27/2024	02/13/2024	524.23	0.00	Paid	Y
2383	INTEGRITY BUSINESS SOLUTIONS	02/13/2024	02/14/2024	306.94	306.94	Open	N
2384	INTEGRITY BUSINESS SOLUTIONS	02/06/2024	02/14/2024	221.58	221.58	Open	N
2388	CINTAS	02/15/2024	02/16/2024	77.00	77.00	Open	N
2389	INTEGRITY BUSINESS SOLUTIONS	02/14/2024	02/16/2024	(38.65)	(38.65)	Open	N
2397	CITYWEBCENTRAL	02/26/2024	02/27/2024	3,000.00	3,000.00	Open	N
2398	INTEGRITY BUSINESS SOLUTIONS	02/15/2024	02/27/2024	115.55	115.55	Open	N
2399	ELECTION SOURCE	02/19/2024	02/27/2024	70.91	70.91	Open	N
2400	OCEANA'S HERALD JOURNAL	02/27/2024	02/27/2024	74.00	74.00	Open	N
2401	PENTWATER TOWNSHIP LIBRARY	02/27/2024	02/27/2024	30.00	30.00	Open	N
2402	PENTWATER TOWNSHIP LIBRARY	02/27/2024	02/27/2024	174.87	174.87	Open	N
2403	PENTWATER TOWNSHIP LIBRARY	02/20/2024	02/27/2024	116.48	116.48	Open	N
2404	RICOH USA, INC - 1	02/16/2024	02/27/2024	111.92	111.92	Open	N
2428	CINTAS	02/29/2024	03/01/2024	77.00	77.00	Open	N
2429	INTEGRITY BUSINESS SOLUTIONS	02/29/2024	03/01/2024	45.98	45.98	Open	N
2430	MAUREEN MURPHY	02/29/2024	03/01/2024	120.60	120.60	Open	N

# of Invoices:	23	# Due: 22	Totals:	8,237.88	7,713.65
# of Credit Memos:	1	# Due: 1	Totals:	(38.65)	(38.65)
Net of Invoices and Credit Memos:				8,199.23	7,675.00
				+ 29,235.62	PAYROLL INCL ELECTIONS
				37,434.85	

--- TOTALS BY FUND ---

101 - GENERAL FUND	8,199.23	7,675.00

--- TOTALS BY DEPT/ACTIVITY ---

171 - SUPERVISOR	100.95	0.00
215 - CLERK	96.05	0.00
262 - ELECTION	510.12	482.86
265 - TOWNSHIP	7,328.68	7,028.71
597 - DOC/RECREATION/PLIB	30.00	30.00
701 - PLANNING COMMISSION	133.43	133.43

INVOICE REGISTER REPORT FOR PENTWATER TOWNSHIP
POST DATES 02/09/2024 - 03/06/2024
BOTH JOURNALIZED AND UNJOURNALIZED OPEN AND PAID
BANK CODE: CEMCK

Inv Ref#	Vendor	Inv Date	Due Date	Inv Amt	Amt Due	Status	Jrnlized
2405	COLDSPRING	02/23/2024	02/27/2024	256.00	256.00	Open	Y
2406	CONSUMERS ENERGY	02/22/2024	02/27/2024	29.24	29.24	Open	Y
2407	CONSUMERS ENERGY	02/22/2024	02/27/2024	36.61	36.61	Open	Y
2408	CONSUMERS ENERGY	02/22/2024	02/27/2024	30.38	30.38	Open	Y
2409	CONSUMERS ENERGY	02/22/2024	02/27/2024	29.24	29.24	Open	Y
2410	FRONTIER	02/10/2024	02/27/2024	166.88	166.88	Open	Y

# of Invoices:	6	# Due:	6	Totals:	548.35	548.35	
# of Credit Memos:	0	# Due:	0	Totals:	0.00	0.00	
Net of Invoices and Credit Memos:					548.35	548.35	

+ 3,490.76 PAYROLL

4,039.11

--- TOTALS BY FUND ---

209 - CEMETERY FUND	548.35	548.35

--- TOTALS BY DEPT/ACTIVITY ---

567 - CEMETERY	548.35	548.35

INVOICE REGISTER REPORT FOR PENTWATER TOWNSHIP
POST DATES 02/09/2024 - 03/06/2024
BOTH JOURNALIZED AND UNJOURNALIZED OPEN AND PAID
BANK CODE: FDCHK

Inv Ref#	Vendor	Inv Date	Due Date	Inv Amt	Amt Due	Status	Jrnlized
2385	CHARTER COMMUNICATIONS	02/01/2024	02/14/2024	275.91	275.91	Open	Y
2386	DTE ENERGY	02/06/2024	02/14/2024	238.25	238.25	Open	Y
2387	INTEGRITY BUSINESS SOLUTIONS	02/13/2024	02/14/2024	56.99	56.99	Open	Y
2415	CONSUMERS ENERGY	02/22/2024	03/01/2024	308.97	308.97	Open	Y
2416	LARSON AND SON	02/16/2024	03/01/2024	37.98	37.98	Open	Y
2417	LARSON AND SON	02/22/2024	03/01/2024	120.92	120.92	Open	Y
2418	MACQUEEN EMERGENCY	02/19/2024	03/01/2024	840.28	840.28	Open	Y
2419	MICHIGAN COUNTIES WORKERS COMP FU	02/09/2024	03/01/2024	704.60	704.60	Open	Y
2420	PENTWATER CONVENIENCE CENTER	02/01/2024	03/01/2024	13.59	13.59	Open	Y
2421	PENTWATER CONVENIENCE CENTER	02/01/2024	03/01/2024	25.23	25.23	Open	Y
2422	PENTWATER CONVENIENCE CENTER	02/09/2024	03/01/2024	14.63	14.63	Open	Y
2423	PENTWATER CONVENIENCE CENTER	01/16/2024	03/01/2024	22.42	22.42	Open	Y
2424	PENTWATER CONVENIENCE CENTER	01/18/2024	03/01/2024	22.87	22.87	Open	Y
2425	PENTWATER CONVENIENCE CENTER	02/01/2024	03/01/2024	23.08	23.08	Open	Y
2426	PENTWATER CONVENIENCE CENTER	01/30/2024	03/01/2024	24.47	24.47	Open	Y

# of Invoices:	15	# Due: 15	Totals:	2,730.19	2,730.19
# of Credit Memos:	0	# Due: 0	Totals:	0.00	0.00
Net of Invoices and Credit Memos:				2,730.19	2,730.19
				406.44 PAYROLL	
				3,136.63	

--- TOTALS BY FUND ---

206 - FIRE FUND	2,730.19	2,730.19

--- TOTALS BY DEPT/ACTIVITY ---

336 - FIRE	2,730.19	2,730.19

INVOICE REGISTER REPORT FOR PENTWATER TOWNSHIP
POST DATES 02/09/2024 - 03/06/2024
BOTH JOURNALIZED AND UNJOURNALIZED OPEN AND PAID
BANK CODE: SEW

Inv Ref#	Vendor	Inv Date	Due Date	Inv Amt	Amt Due	Status	Jrnlized
2375	DTE ENERGY	02/06/2024	02/09/2024	57.89	57.89	Open	Y
2376	F&V OPERATIONS	02/06/2024	02/09/2024	1,723.88	1,723.88	Open	Y
2411	CONSUMERS ENERGY	02/21/2024	02/27/2024	41.71	41.71	Open	Y
2412	CONSUMERS ENERGY	02/21/2024	02/27/2024	51.92	51.92	Open	Y
2413	GREAT LAKES ENERGY	02/16/2024	02/27/2024	297.09	297.09	Open	Y
2414	MISS DIG 811	01/29/2024	02/27/2024	940.07	940.07	Open	Y
2427	MIKA MYERS	02/21/2024	03/01/2024	67.00	67.00	Open	Y

# of Invoices:	7	# Due:	7	Totals:	3,179.56	3,179.56
# of Credit Memos:	0	# Due:	0	Totals:	0.00	0.00
Net of Invoices and Credit Memos:					3,179.56	3,179.56
				+	488.10	PAYROLL
					3,667.66	

--- TOTALS BY FUND ---

592 - SEWER FUND	3,179.56	3,179.56

--- TOTALS BY DEPT/ACTIVITY ---

538 - SHARED N&S SEWER EXPENDITUR	2,730.95	2,730.95
540 - TWP NORTH SEWER EXPENDITURE	93.63	93.63
541 - TWP SOUTH SEWER EXPENDITURE	354.98	354.98

Check Register Report For Pentwater Township
For Check Dates 02/15/2024 to 03/13/2024

Check Date	Bank	Check Number	Name	Check Gross	Physical Check Amount	Direct Deposit	Status
03/05/2024	GFCKG	22702	BROSKY, ALBERT E	353.60	353.60	0.00	Open
03/05/2024	GFCKG	22703	EVANS, INGER	225.42	225.42	0.00	Open
03/05/2024	GFCKG	22704	FELTES, CAROL A	97.24	97.24	0.00	Open
03/05/2024	GFCKG	22705	GARBOWSKY, MARIAN R	229.84	229.84	0.00	Open
03/05/2024	GFCKG	22706	KARAPTIAN, CHRISTINA L	229.84	229.84	0.00	Open
03/05/2024	GFCKG	22707	KASSANOS, LAURA M	362.44	362.44	0.00	Open
03/05/2024	GFCKG	22708	LAMB, KIMBERLY D	353.60	353.60	0.00	Open
03/05/2024	GFCKG	22709	LEWIS-THORESON, MARILYN K	318.24	318.24	0.00	Open
03/05/2024	GFCKG	22710	MITCHELL, MARGARET C	800.02	800.02	0.00	Open
03/05/2024	GFCKG	22711	MORRISON, JANE M	335.92	335.92	0.00	Open
03/05/2024	GFCKG	22712	RUSSELL, ELIZABETH A	70.72	70.72	0.00	Open
03/05/2024	GFCKG	22713	SUTTNER, LORI A	442.00	408.19	0.00	Open
03/05/2024	GFCKG	22714	WRISLEY, JEFFREY A	353.60	353.60	0.00	Open
03/05/2024	GFCKG	22715	ZACHRICH, LYNN	194.48	194.48	0.00	Open
03/05/2024	GFCKG	EFT163	EFTPS TWP	2,176.57	2,176.57	0.00	Open
02/29/2024	GFCKG	22694	BEAVIS, GLENN C	1,675.00	1,194.29	0.00	Open
02/29/2024	GFCKG	22695	CAVAZOS, LYNNETTE M	1,485.58	1,170.20	0.00	Open
02/29/2024	GFCKG	22696	DOUGLAS, HEATHER A	1,485.58	1,292.17	0.00	Open
02/29/2024	GFCKG	22697	EATON, BARBARA C	2,278.33	1,834.64	0.00	Open
02/29/2024	GFCKG	22698	EDWARDS, KEITH J	1,083.83	970.06	0.00	Open
02/29/2024	GFCKG	22699	FLOOD, DEBRA A	290.00	265.41	0.00	Open
02/29/2024	GFCKG	22700	FLOOD, JOSEPH M	270.56	238.36	0.00	Open
02/29/2024	GFCKG	22701	MURPHY, MAUREEN H	1,485.58	1,292.17	0.00	Open
02/15/2024	GFCKG	22681	BEAVIS, GLENN C	1,085.00	777.14	0.00	Open
02/15/2024	GFCKG	22682	CAVAZOS, LYNNETTE M	1,485.58	1,170.19	0.00	Open
02/15/2024	GFCKG	22683	CLUCHEY, TERRY L.	82.59	72.76	0.00	Open
02/15/2024	GFCKG	22684	DEGREGORIO, PAULA M	82.59	72.76	0.00	Open
02/15/2024	GFCKG	22685	DOUGLAS, HEATHER A	1,485.58	1,292.16	0.00	Open
02/15/2024	GFCKG	22686	EATON, BARBARA C	2,278.33	1,834.63	0.00	Open
02/15/2024	GFCKG	22687	EDWARDS, KEITH J	1,183.83	1,048.15	0.00	Open

Check Date	Bank	Check Number	Name	Check Gross	Physical Check Amount	Direct Deposit	Status
02/15/2024	GFCKG	22688	FLOOD, DEBRA A	700.00	599.54	0.00	Open
02/15/2024	GFCKG	22689	FLOOD, JOSEPH M	270.56	238.36	0.00	Open
02/15/2024	GFCKG	22690	FLYNN, MICHAEL W	134.42	108.43	0.00	Open
02/15/2024	GFCKG	22691	HOOYMAN, PATRICK J	82.59	72.76	0.00	Open
02/15/2024	GFCKG	22692	MONTON, ANTHONY A	103.24	90.95	0.00	Open
02/15/2024	GFCKG	22693	MURPHY, MAUREEN H	1,485.58	1,292.16	0.00	Open
02/15/2024	GFCKG	EFT161	EFTPS TWP	2,176.74	2,176.74	0.00	Open
Totals:			Number of Checks: 037	29,234.62	25,613.75	0.00	

Total Physical Checks: 35
Total Check Stubs: 2

Check Register Report For Pentwater Township

For Check Dates 02/15/2024 to 03/13/2024

Check Date	Bank	Check Number	Name	Check Gross	Physical Check Amount	Direct Deposit	Status
02/15/2024	FDCHK	4028	HAYNOR, MARK R.	312.50	275.31	0.00	Cleared
02/15/2024	FDCHK	4029	SMITH, KAREN R	40.00	36.94	0.00	Open
02/15/2024	FDCHK	EFT160	EFTPS FIRE	53.94	53.94	0.00	Cleared
Totals:			Number of Checks: 003	406.44	366.19	0.00	

Total Physical Checks: 2

Total Check Stubs: 1

Check Register Report For Pentwater Township

For Check Dates 02/15/2024 to 03/13/2024

Check Date	Bank	Check Number	Name	Check Gross	Physical Check Amount	Direct Deposit	Status
03/05/2024	SEW	EFT165	EFTPS SEWER	25.50	25.50	0.00	Open
02/29/2024	SEW	8104	DOUGLAS, HEATHER A	166.66	153.91	0.00	Cleared
02/20/2024	SEW	EFT162	EFTPS SEWER	39.28	39.28	0.00	Cleared
02/15/2024	SEW	8102	DOUGLAS, HEATHER A	166.66	153.91	0.00	Cleared
02/15/2024	SEW	8103	EDWARDS, KEITH J	90.00	83.11	0.00	Cleared
Totals:			Number of Checks: 005	488.10	455.71	0.00	

Total Physical Checks: 3

Total Check Stubs: 2

Copy of FY2024-25 General Fund Consolidated (Budget Prep)

DEPT 000 - GENERAL FUND

GL Number	Description	2023-24 Original Budget	12/31/2023 Amended Budget	YTD As Of 12/31/2023	2024-25 PROPOSED	2024-25 BOARD	2024-25 APPROVED
Fund 101							
--- Estimated Revenue ---							
101-000-401.000	FROM PREV YEAR-END	98,387	98,387	0	218,922 ~~128,922~~	0	0
101-000-402.000	CURRENT REAL PROPERTY	299,244	299,244	43,777	~~314,206~~	0	0
101-000-405.000	TAX ADMINISTRATION FEE	60,700	60,700	39,043	63,735	0	0
101-000-405.001	ADMIN FEE LAND BANK	0	0	0	0	0	0
101-000-406.000	DELIQUENT TAX ADMIN FEE	0	0	0	0	0	0
101-000-411.000	DELINQUENT REAL PROP TAX	0	0	13,220	0	0	0
101-000-429.000	COMM FOREST TAX	20	20	65	21	0	0
101-000-432.000	STATE PMT IN LIEU OF TAX (PILT)	3,300	3,300	0	3,465	0	0
101-000-434.000	TRAILER PARK TAX	200	200	0	200	0	0
101-000-442.000	HOMESTEAD DENIALS	0	0	234	0	0	0
101-000-445.000	PENALTY & INTEREST TAXES	100	100	0	105	0	0
101-000-477.000	FRANCHISE FEES (CHARTER COMM)	8,000	8,000	6,259	8,000	0	0
101-000-479.000	ZONING PERMIT FEES	2,000	2,000	1,220	1,600		0
~~101-000-481.000~~	~~PLANNING COMMISSION REVIEW FEES~~	~~1,050~~	~~1,050~~	~~525~~	~~0~~	~~0~~	~~0~~
101-000-546.000	METRO ACT	3,900	3,900	3,216	4,095	0	0
101-000-549.000	STATE GRANT ELECTION REIMB	4,900	4,900	0	5,145	0	0
101-000-573.000	LOCAL COMMUNITY STABILIZATION SHARE	0	0	886	0	0	0
101-000-574.000	STATE SHARED REVENUE	56,100	56,100	53,762	84,102	0	0
101-000-602.000	COPY FEES	0	0	74	0	0	0
~~101-000-603.000~~	~~ZBA FEES~~	~~0~~	~~0~~	~~0~~	~~0~~	~~0~~	~~0~~
101-000-607.000	ZONING - LAND DIV REVIEW FEES	0	0	0	300		0
101-000-607.001	ZONING - PC REVIEW FEES	0	0	0	300		0
101-000-607.002	ZONING - ZBA REVIEW FEES	1,600	1,600	800	1,200	0	0
101-000-607.003	ZONING - TWP BOARD REVIEW FEES	0	0	0	2,500		0
101-000-628.000	TRANSFER SITE FEES	11,200	11,200	11,535	12,000	0	0
101-000-664.000	INTEREST INCOME	300	300	16,352	15,000	0	0
101-000-672.000	OTHER REVENUE	1,400	1,400	143	0	0	0
101-000-672.001	VENDOR REFUNDS	0	0	0	0	0	0
101-000-686.000	MISCELLANEOUS	4,500	4,500	21,808	4,500	0	0
101-000-699.000	**TRANSFER IN**	**0**	**0**	**0**	**27,025**	**0**	**0**
Total Estimated Revenue:		**556,901**	**556,901**	**212,918**	~~676,421~~ 766,421	**0**	**0**

DEPT 101 TOWNSHIP BOARD

GL Number	Description	2023-24 Original Budget	12/31/2023 Amended Budget	YTD As Of 12/31/2023	2024-25 PROPOSED	2024-25 BOARD	2024-25 APPROVED
Fund 101							
--- Appropriations ---							
101-101-702.000	SALARIES & WAGES	3,308	3,308	2,279	3,473	0	0
101-101-705.000	EMPLOYER FICA CONTRIB	253	253	174	266	0	0
101-101-999.000	TRANSFER OUT	0	0	0	0	0	0
Total Appropriations:		**3,561**	**3,561**	**2,453**	**3,739**	**0**	**0**

DEPT 171 SUPERVISOR

GL Number	Description	2023-24 Original Budget	12/31/2023 Amended Budget	YTD As Of 12/31/2023	2024-25 PROPOSED	2024-25 BOARD	2024-25 APPROVED
Fund 101							
--- Appropriations ---							
101-171-702.000	SALARIES & WAGES	35,654	35,654	26,740	37,436	0	0
101-171-702.001	DEPUTY WAGES	9,178	9,178	8,987	12,000	0	0
101-171-705.000	EMPLOYER FICA CONTRIB	3,430	3,430	2,733	3,601	0	0
101-171-727.000	TWP SUPERVISOR OFFICE SUPPLIES	0	0	0	0	0	0
101-171-815.000	EDUCATION/TRAINING	0	0	0	0	0	0
101-171-910.000	EDUCATION/TRAINING	1,000	800	100	1,050	0	0
101-171-913.000	TRAVEL	400	600	597	600	0	0
101-171-955.000	MISCELLANEOUS	0	0	38	0	0	0
Total Appropriations:		**49,661**	**49,661**	**39,195**	**54,688**	**0**	**0**

DEPT 215 CLERK

GL Number	Description	2023-24 Original Budget	12/31/2023 Amended Budget	YTD As Of 12/31/2023	2024-25 PROPOSED	2024-25 BOARD	2024-25 APPROVED
Fund 101							
--- Appropriations ---							
101-215-702.000	SALARIES & WAGES	35,654	35,654	27,907	37,436	0	0
101-215-702.001	DEPUTY WAGES	26,774	26,774	20,454	28,113	0	0
101-215-705.000	EMPLOYER FICA CONTRIB	4,776	4,776	3,740	5,015	0	0
101-215-707.000	PAID TIME OFF	0	0	245	560	0	0
101-215-712.000	RECORDING SECRETARY	0	0	0	0	0	0
101-215-727.000	TWP CLERK OFFICE SUPPLIES	0	0	184	0	0	0
101-215-812.000	REC SECRETARY	500	500	451	525	0	0
101-215-815.000	EDUCATION/TRAINING	0	0	0	0	0	0

101-215-860.000	TRAVEL EXPENSES	0	0	13	0	0	0
101-215-910.000	EDUCATION/TRAINING	2,000	2,000	801	2,100	0	0
101-215-913.000	TRAVEL	3,000	3,000	2,344	3,150	0	0
101-215-955.000	MISCELLANEOUS	0	0	80	100	0	0
Total Appropriations:		**72,703**	**72,703**	**56,219**	**76,999**	**0**	**0**

DEPT 247 BOARD OF REVIEW

GL Number	Description	2023-24 Original Budget	12/31/2023 Amended Budget	YTD As Of 12/31/2023	2024-25 PROPOSED	2024-25 BOARD	2024-25 APPROVED
Fund 101							
--- Appropriations ---							
101-247-702.000	SALARIES & WAGES	1,103	1,103	434	1,160	0	0
101-247-705.000	EMPLOYER FICA CONTRIB	84	84	33	122	0	0
101-247-815.000	EDUCATION/TRAINING	0	0	0	0	0	0
101-247-860.000	TRAVEL EXPENSES	100	100	0	100	0	0
101-247-910.000	EDUCATION/TRAINING	125	125	0	125	0	0
101-247-955.000	MISCELLANEOUS	500	500	0	500	0	0
Total Appropriations:		**1,912**	**1,912**	**467**	**2,007**	**0**	**0**

DEPT 253 TREASURER

GL Number	Description	2023-24 Original Budget	12/31/2023 Amended Budget	YTD As Of 12/31/2023	2024-25 PROPOSED	2024-25 BOARD	2024-25 APPROVED
Fund 101							
--- Appropriations ---							
101-253-702.000	SALARIES & WAGES	35,654	35,654	26,740	37,436	0	0
101-253-702.001	DEPUTY WAGES	12,377	12,377	9,381	12,996	0	0
101-253-705.000	EMPLOYER FICA CONTRIB	3,674	3,674	2,763	3,858	0	0
101-253-727.000	TWP TREASURER OFFICE SUPPLIES	0	100	78	100	0	0
101-253-752.000	SUPPLIES/EQUIPMENT	500	500	140	500	0	0
101-253-802.000	PROF SERV SOFTW	4,250	4,250	1,887	4,250	0	0
101-253-815.000	EDUCATION/TRAINING	0	700	670	0	0	0
101-253-851.000	POSTAGE	4,300	4,300	4,746	4,300	0	0
101-253-860.000	TRAVEL EXPENSES	0	0	479	0	0	0
101-253-910.000	EDUCATION/TRAINING	2,500	950	683	1,900	0	0
101-253-913.000	TRAVEL	2,000	2,300	2,333	2,500	0	0
101-253-955.000	MISCELLANEOUS	100	550	676	0	0	0
Total Appropriations:		**65,356**	**65,356**	**50,576**	**67,840**	**0**	**0**

DEPT 257 ASSESSOR

GL Number	Description	2023-24 Original Budget	12/31/2023 Amended Budget	YTD As Of 12/31/2023	2024-25 PROPOSED	2024-25 BOARD	2024-25 APPROVED
Fund 101							
--- Appropriations ---							
101-257-702.000	SALARIES & WAGES	54,681	54,681	41,010	57,415	0	0
101-257-705.000	EMPLOYER FICA CONTRIB	4,183	4,183	3,137	4,392	0	0
101-257-802.001	PROF SERVICES - ATTY	2,000	2,000	992	2,000	0	0
101-257-804.000	PROF SER SOFTWA	2,135	3,700	3,630	3,700	0	0
101-257-851.000	POSTAGE	3,000	1,435	0	3,000	0	0
101-257-955.000	MISCELLANEOUS	0	0	38	100	0	0
Total Appropriations:		**65,999**	**65,999**	**48,807**	**70,607**	**0**	**0**

DEPT 262 ELECTION

GL Number	Description	2023-24 Original Budget	12/31/2023 Amended Budget	YTD As Of 12/31/2023	2024-25 PROPOSED	2024-25 BOARD	2024-25 APPROVED
Fund 101							
--- Appropriations ---							
101-262-702.000	SALARIES & WAGES	8,269	8,269	0	10,000	0	0
101-262-705.000	EMPLOYER FICA CONTRIB	633	633	0	765	0	0
101-262-752.000	SUPPLIES/EQUIPMENT	6,000	6,000	288	5,000	0	0
101-262-801.000	ELECT SERVICE OTHER	4,900	4,900	0	5,000	0	0
101-262-802.000	ELECT OTHER CON	250	250	0	0	0	0
101-262-803.000	ELECTION SOURCE - CONTRACTUAL	0	0	0	700	0	0
101-262-815.000	EDUCATION/TRAINING	2,000	2,000	0	0	0	0
101-262-851.000	POSTAGE	4,000	4,000	0	4,000	0	0
101-262-860.000	TRAVEL EXPENSES	0	0	0	0	0	0
101-262-910.000	EDUCATION/TRAINING	2,000	2,000	0	2,000	0	0
101-262-913.000	TRAVEL	500	500	48	500	0	0
101-262-955.000	MISCELLANEOUS	1,750	1,750	337	1,750	0	0
Total Appropriations:		**30,301**	**30,301**	**672**	**29,715**	**0**	**0**

DEPT 265 TOWNSHIP

GL Number	Description	2023-24 Original Budget	12/31/2023 Amended Budget	YTD As Of 12/31/2023	2024-25 PROPOSED	2024-25 BOARD	2024-25 APPROVED
Fund 101							
--- Appropriations ---							
101-265-705.000	EMPLOYER FICA CONTRIB	450	450	351	472	0	0
101-265-706.000	CUSTODIAL WAGES	5,880	5,880	4,593	6,174	0	0
101-265-727.000	TWP OFFICE SUPPLIES	0	800	717	840	0	0
101-265-752.000	SUPPLIES/EQUIPMENT	6,000	6,000	5,017	6,300	0	0
101-265-802.000	PROF SERV SOFTWARE	5,550	5,550	4,246	5,828	0	0
101-265-804.000	PROF SERV-ATTOR	10,000	10,000	8,168	25,000	0	0
101-265-805.000	PROF SERV-AUDIT	5,500	5,500	6,838	15,000	0	0
101-265-806.000	OTHER SERVICES	2,100	2,100	156	0	0	0
101-265-806.001	PROF SERV INFO	6,250	6,250	4,661	6,563	0	0
101-265-807.000	PROF SERV WEB	1,000	1,000	565	12,500	0	0
101-265-808.000	BUOYS	350	350	83		0	0
101-265-809.000	OTHER SERVICES	0	0	0	0	0	0
101-265-815.000	EDUCATION/TRAINING	0	0	0	0	0	0
101-265-828.000	BANK FEES	1,600	1,600	916	1,680	0	0
101-265-829.000	PERMITS	0	40	40	42	0	0
101-265-850.000	UTIL PH/INTERNE	4,000	4,000	2,606	4,200	0	0
101-265-851.000	POSTAGE	3,200	3,200	585	3,360	0	0
101-265-854.000	COPYING	300	3,000	2,826	4,000	0	0
101-265-855.000	OTHER SER/CHGS	2,400	2,400	1,951	2,520	0	0
101-265-860.000	TRAVEL EXPENSES	100	100	0	0	0	0
101-265-900.000	PRINT/PUBLISH	3,000	3,000	2,051	3,150	0	0
101-265-900.001	PRINT/PUB NOTIC	1,200	1,200	754	1,260	0	0
101-265-910.000	EDUCATION/TRAINING	1,000	1,000	0	0	0	0
101-265-913.000	TRAVEL	0	0	0	0	0	0
101-265-915.000	MEMBER/DUES	6,000	6,000	5,002	6,300	0	0
101-265-915.001	MEM/DUES MML	250	250	200	263	0	0
101-265-915.002	MEM/DUES OTHER	500	500	0	0	0	0
101-265-920.000	UTILITIES	7,400	7,400	4,119	7,770	0	0
101-265-930.000	REP/MAIN BRINE	0	0	0	0	0	0
101-265-931.000	REP/MAINT BUILDING	0	11,000	10,967	15,000	0	0
101-265-932.000	REP/MAIN MOW/SN	2,000	2,000	1,286	2,100	0	0
101-265-933.000	WEB	0	0	0	0	0	0
101-265-934.000	REP/MAIN CUSTOD	500	500	0	525	0	0
101-265-934.003	REP/MAIN MISC	6,000	4,600	275	500	0	0
101-265-935.000	INSURANCE/BONDS	10,050	10,050	10,270	4,200	0	0

101-265-937.000	WORK COMP	1,500	1,500	1,124	1,575	0	0
101-265-940.000	COPY MACH RENT	1,500	1,500	683	1,575	0	0
101-265-940.001	POST MACH RENT	500	500	171	525	0	0
101-265-941.000	CONTIGENCY	0	0	0	0	0	0
101-265-955.000	MISCELLANEOUS	5,000	2,000	1,928	2,100	0	0
101-265-970.000	CAP OUT-COMPUTE	2,500	2,500	0	8,100	0	0
101-265-970.002	CAP OUT-BLDG	1,000	1,000	0	1,050	0	0
101-265-970.003	CAP OUT OTHER	30,000	14,960	0	15,708	0	0
101-265-970.004	CAP OUT BLD REP	3,000	3,000	0	3,150	0	0
101-265-991.100	DEBT SERVICE	0	0	0	0	0	0
101-265-995.000	TRANSFERS OUT	6,200	6,200	0	90,000	0	0
Total Appropriations:		**143,780**	**138,880**	**83,149**	**169,329**	**0**	**0**

DEPT 445 DRAIN

GL Number	Description	2023-24 Original Budget	12/31/2023 Amended Budget	YTD As Of 12/31/2023	2024-25 PROPOSED	2024-25 BOARD	2024-25 APPROVED
Fund 101							
--- Appropriations ---							
101-445-875.000	AT LARGE DRAINAGE ASSESSMENT	0	0	0	20,000	0	0
Total Appropriations:		**0**	**0**	**0**	**20,000**	**0**	**0**

DEPT 526 TRANSFER STATION

GL Number	Description	2023-24 Original Budget	12/31/2023 Amended Budget	YTD As Of 12/31/2023	2024-25 PROPOSED	2024-25 BOARD	2024-25 APPROVED
Fund 101							
--- Appropriations ---							
101-526-702.000	SALARIES & WAGES	14,120	14,120	11,542	14,826	0	0
101-526-705.000	EMPLOYER FICA CONTRIB	1,080	1,080	883	1,134	0	0
101-526-752.000	SUPPLIES/EQUIPMENT	300	300	268	315	0	0
101-526-802.000	CONTRACTUAL SER	1,000	0	0	0	0	0
101-526-900.000	PRINT/PUBLISH	500	0	0	0	0	0
101-526-934.000	REP/MAINT	1,000	6,500	6,465	30,000	0	0
101-526-940.000	RENTALS	21,000	22,400	24,954	28,000	0	0
101-526-940.001	EQUIP RENT/JONS	1,000	1,000	803	1,050	0	0
101-526-956.000	MISCELLANEOUS	600	100	38	105	0	0
101-526-964.000	REFUNDS	0	0	0	0	0	0
Total Appropriations:		**40,601**	**45,501**	**44,953**	**75,431**	**0**	**0**

DEPT 527 SEWER-UTILITIES

GL Number	Description	2023-24 Original Budget	12/31/2023 Amended Budget	YTD As Of 12/31/2023	2024-25 PROPOSED	2024-25 BOARD	2024-25 APPROVED
~~Fund 101~~							
~~--- Appropriations ---~~							
~~101-527-802.000~~	~~CONTRACT SERVICES~~	~~0~~	~~0~~	~~0~~	~~0~~	~~0~~	~~0~~
~~101-527-829.000~~	~~PERMITS~~	~~0~~	~~0~~	~~0~~	~~0~~	~~0~~	~~0~~
~~101-527-851.000~~	~~POSTAGE~~	~~0~~	~~0~~	~~0~~	~~0~~	~~0~~	~~0~~
~~101-527-920.000~~	~~UTILITIES~~	~~0~~	~~0~~	~~0~~	~~0~~	~~0~~	~~0~~
~~101-527-932.000~~	~~REPAIR/MAINT~~	~~0~~	~~0~~	~~0~~	~~0~~	~~0~~	~~0~~
~~101-527-955.000~~	~~MISCELLANEOUS~~	~~0~~	~~0~~	~~0~~	~~0~~	~~0~~	~~0~~
~~101-527-970.000~~	~~SEW/LAND CAP OU~~	~~0~~	~~0~~	~~0~~	~~0~~	~~0~~	~~0~~
~~**Total Appropriations:**~~		~~**0**~~	~~**0**~~	~~**0**~~	~~**0**~~	~~**0**~~	~~**0**~~

DEPT 597 DOC/RECREATION/PLIB

GL Number	Description	2023-24 Original Budget	12/31/2023 Amended Budget	YTD As Of 12/31/2023	2024-25 PROPOSED	2024-25 BOARD	2024-25 APPROVED
Fund 101							
--- Appropriations ---							
101-597-802.000	CONT SER DOCK	1,000	700	700	735	0	0
101-597-804.000	CONT SERV REC	7,500	7,500	7,500	7,500	0	0
101-597-804.100	PARK PLACE	7,500	7,500	7,500	7,500	0	0
101-597-804.200	NORTHEND PARK	0	0	0	0	0	0
101-597-805.000	CONT SERV PLIB	6,000	6,350	6,350	6,350	0	0
101-597-934.000	REP/MAIN BOAT Launch	5,000	5,500	5,497	25,000	0	0
101-597-955.000	MISCELLANEOUS - Buoy in/out	1,000	450	350	1,500	0	0
Total Appropriations:		**28,000**	**28,000**	**27,897**	**48,585**	**0**	**0**

DEPT 701 PLANNING COMMISSION

GL Number	Description	2023-24 Original Budget	12/31/2023 Amended Budget	YTD As Of 12/31/2023	2024-25 PROPOSED	2024-25 BOARD	2024-25 APPROVED
Fund 101							
--- Appropriations ---							
101-701-702.000	Salaries & Wages	2,310	3,310	3,386	2,700	0	0
101-701-705.000	EMPLOYER FICA CONTRIB	177	177	259	270	0	0
101-701-802.000	PROF SERV ATTORNEY	1,000	1,900	1,853	2,000	0	0
101-701-804.000	PROF SERV CONSULTANT	500	500	0	0	0	0
101-701-805.000	MASTER PLAN UPDATE	3,000	900	813	0	0	0

101-701-812.000	RECORDING SECRETARY	375	375	0	0	0	0
~~101-701-815.000~~	~~EDUCATION/TRAINING~~	~~0~~	~~0~~	~~0~~	~~0~~	~~0~~	~~0~~
101-701-851.000	POSTAGE	0	0	0	0	0	0
~~101-701-860.000~~	~~TRAVEL EXPENSES~~	~~0~~	~~0~~	~~0~~	~~0~~	~~0~~	~~0~~
101-701-900.000	NEWSPAPER PUBLICATIONS	500	700	652	700	0	0
101-701-910.000	EDUCATION/TRAINING	100	100	0	200	0	0
101-701-913.000	TRAVEL/EXPENSES	100	100	0	1,000	0	0
101-701-955.000	MISCELLANEOUS	0	0	0	0	0	0
101-701-964.000	REFUNDS	100	100	0	125	0	0
Total Appropriations:		**8,162**	**8,162**	**6,962**	**6,995**	**0**	**0**

DEPT 702 ZONING ADMINISTRATION

GL Number	Description	2023-24 Original Budget	12/31/2023 Amended Budget	YTD As Of 12/31/2023	2024-25 PROPOSED	2024-25 BOARD	2024-25 APPROVED
Fund 101							
--- Appropriations ---							
101-702-005.000	ZBA FRINGES	0	0	0	0	0	0
101-702-702.000	SALARIES & WAGES	25,520	25,520	18,257	26,796	0	0
101-702-702.001	DEPUTY WAGES	0	0	0	0	0	0
101-702-703.000	HEARING OFFICER WAGES	210	210	0	225	0	0
101-702-705.000	EMPLOYER FICA CONTRIB	1,968	1,968	1,402	2,067	0	0
101-702-752.000	SUPPLIES/EQUIPMENT	30	30	0	50	0	0
101-702-802.000	PROF SERVICES	11,500	10,700	982	12,000	0	0
101-702-802.001	PROF SER ATTY	3,500	4,300	5,162	5,500	0	0
101-702-804.000	PROF SERV CONSU	0	0	0	0	0	0
101-702-812.000	REC SECRETARY	0	0	65	0	0	0
101-702-815.000	EDUCATION/TRAINING	0	0	0	0	0	0
101-702-860.000	TRAVEL EXPENSES	0	0	0	0	0	0
101-702-880.000	ADVERTISING-ZON	0	0	0	0	0	0
101-702-900.000	PRINT/PUBLISH	600	600	206	300	0	0
101-702-910.000	EDUCATION/TRAINING	150	150	0	150	0	0
101-702-913.000	TRAVEL	100	100	0	100	0	0
101-702-955.000	MISCELLANEOUS	0	0	38	50	0	0
101-702-964.000	REFUNDS	200	200	0	200	0	0
Total Appropriations:		**43,779**	**43,779**	**26,111**	**47,438**	**0**	**0**

DEPT 703 ZONING BOARD OF APPEALS

GL Number	Description	2023-24 Original Budget	12/31/2023 Amended Budget	YTD As Of 12/31/2023	2024-25 PROPOSED	2024-25 BOARD	2024-25 APPROVED
Fund 101							
--- Appropriations ---							
101-703-702.000	SALARIES & WAGES	704	704	457	500	0	0
101-703-705.000	EMPLOYER FICA CONTRIB	54	54	35	50	0	0
101-703-802.000	PROF SERV ATTY	750	750	104	500	0	0
~~101-703-815.000~~	~~EDUCATION/TRAINING~~	~~0~~	~~0~~	~~0~~	~~0~~	~~0~~	~~0~~
~~101-703-860.000~~	~~TRAVEL EXPENSES~~	~~0~~	~~0~~	~~0~~	~~0~~	~~0~~	~~0~~
101-703-900.000	PRINT/PUBLISH	900	600	1,012	1,100	0	0
101-703-910.000	EDUCATION/TRAINING	150	450	450	300	0	0
101-703-913.000	TRAVEL	100	100	0	100	0	0
101-703-955.000	MISCELLANEOUS	30	30	95	100	0	0
101-703-964.000	REFUNDS	400	400	0	400	0	0
Total Appropriations:		**3,087**	**3,087**	**2,152**	**3,050**	**0**	**0**

GRAND TOTAL - GENERAL FUND						
Revenue:	**556,901**	**556,901**	**212,918**	**676,421**	**0**	**0**
Expenses:	**556,901**	**556,901**	**389,613**	**676,422**	**0**	**0**
Net Revenue/Expenses:	(0)	(0)	(176,695)	(0)	0	0

Copy of FY2024-25 Cemetery Fund (Budget Prep)

GL Number	Description	2023-24 Original Budget	12/31/2023 Amended Budget	YTD As Of 12/31/2023	2024-25 PROPOSED	2024-25 BOARD	2024-25 APPROVED
Fund 209 - CEMETERY FUND							
--- Estimated Revenue ---							
209-000-401.000	PAR PREV YE BAL	13,066	13,066	0	18,038	0	0
209-000-402.000	CURR PROP TAX	83,720	83,720	12,249	100,222	0	0
209-000-411.000	DEL REAL PP TAX	0	0	2,976	0	0	0
209-000-573.000	LOCAL COMMUNITY STABILIZATION SHARE	0	0	0	0	0	0
209-000-607.000	SERV RENDERED	0	0	0	0	0	0
209-000-626.000	INTERMENT FEES	3,000	3,000	1,800	3,000	0	0
209-000-644.000	CEMETERY FOUNDATION	0	0	2,190	2,000	0	0
209-000-645.000	LOT SALES	10,700	10,700	2,300	5,000	0	0
209-000-646.000	COLUM SALES	6,300	6,300	9,365	10,000	0	0
209-000-647.000	SCAT GAR BRICK	300	300	0	100	0	0
209-000-664.000	INTEREST INCOME	100	100	8,158	0	0	0
209-000-671.000	OTHER INCOME	2,400	2,400	3,757	2,400	0	0
209-000-672.001	VENDOR REFUNDS	0	0	0	0	0	0
209-000-699.000	TRANSFER IN	0	0	0	0	0	0
Total Estimated Revenue:		**119,586**	**119,586**	**42,795**	**140,760**	**0**	**0**

--- Appropriations ---							
209-567-702.000	SALARIES & WAGES	17,891	17,891	14,252	18,790		0
209-567-704.000	ASSIST BURIALS	0	0	0	0	0	0
209-567-704.001	CEMETERY ASSISTANT	3,000	3,000	2,767	3,150		0
209-567-705.000	EMPLOYER FICA CONTRIB	2,115	3,000	1,327	3,150		0
209-567-727.000	TWP OFFICE SUPPLIES	0	0	0	0	0	0
209-567-752.000	SUPPLIES/EQUIPMENT	3,000	5,300	5,257	5,300		0
209-567-801.000	PROF SERV-ATTOR	1,500	1,700	1,694	1,700		0
209-567-802.000	PRO SERV SOFTWA	2,100	2,100	1,278	2,100		0
209-567-804.000	PROF SERV MAP	250	250	0	250		0
209-567-805.000	PRO SERV AUDIT	400	400	0	400		0
209-567-806.000	COLUM PLAQUES	3,200	2,500	3,157	3,200		0
209-567-807.000	BRICK ENGRAVING	300	300	0	300		0
209-567-810.000	FOUNDATION EXP	350	1,750	1,802	2,000		0
209-567-828.000	BANK FEES	420	420	347	420		0
209-567-830.008	ADMIN EXPENSE	6,760	6,760	0	3,150		0
209-567-851.000	POSTAGE	0	0	45	50		0
209-567-855.000	OTHER SER/CHGS	0	0	-7	0	0	0
209-567-900.000	PRINT/PUBLISH	300	300	239	300		0
209-567-910.000	EDUCATION/TRAINING	0	0	160	0	0	0
209-567-913.000	TRAVEL	0	0	381	0	0	0
209-567-915.000	MEMBER/DUES	0	0	0	0	0	0
209-567-920.000	UTILITIES	3,200	3,200	3,047	3,200		0
209-567-928.000	REFUNDS	2,000	2,000	400	500		0
209-567-930.000	REP/MAINT BLDGS	500	500	0	500		0
209-567-930.001	REP/MAINT GROUN	7,500	10,500	9,556	22,500		0
209-567-931.000	REP/MAINT EQUIP	2,000	2,000	113	2,000		0
209-567-931.001	REP/MAINT IRRIG	9,000	9,000	2,467	14,000		0
209-567-935.000	INSURANCE	2,500	2,500	2,302	2,500		0
209-567-941.000	CONTINGENCY	0	0	0	0	0	0
209-567-955.000	MISCELLANEOUS	1,300	1,300	51	1,300		0
209-567-970.000	CAPITAL OUTLAY	50,000	42,915	0	50,000		0
Total Appropriations:		**119,586**	**119,586**	**50,634**	**140,760**	**0**	**0**
Net of Revenues & Appropriati Net of Revenues & Appropriations Fund 209:		**$0**	**$0**	**($7,839)**	**$0**	**$0**	**$0**

GL Number	Description	2023-24 Original Budget	12/31/2023 Amended Budget	YTD As Of 12/31/2023	2024-25 PROPOSED	2024-25 BOARD	2024-25 APPROVED
Fund 592 - SEWER FUND							
--- Estimated Revenue ---							
592-000-488.000	UTILITY BILLING REVENUE	0.00	0.00	0.00	0.00	0.00	0.00
592-000-501.000	FEDERAL GRANTS - GENERAL	0.00	0.00	0.00	0.00	0.00	0.00
592-000-552.000	STATE GRANTS - SANITATION	0.00	0.00	0.00	0.00	0.00	0.00
592-000-580.000	OTHER GRANTS	0.00	0.00	0.00	0.00	0.00	0.00
592-000-608.000	SEWER CONNECTION FEES	0.00	0.00	0.00	0.00	0.00	0.00
592-000-610.000	LATE FEES	0.00	0.00	0.00	0.00	0.00	0.00
592-000-642.000	TWP. SEWER SALES	128,500.00	128,500.00	99,411.43	128,500.00	0.00	0.00
592-000-656.000	PENALTIES	1,000.00	1,000.00	517.94	500.00	0.00	0.00
592-000-664.000	INTEREST INCOME	0.00	0.00	0.00	0.00	0.00	0.00
592-000-671.000	MISCELLANEOUS	0.00	0.00	0.00	0.00	0.00	0.00
592-000-672.001	VENDOR REFUNDS	0.00	0.00	0.00	0.00	0.00	0.00
592-000-699.000	TRANSFER IN	124,000.00	124,000.00	0.00	125,000.00	0.00	0.00
Total Estimated Revenue:		**253,500.00**	**253,500.00**	**99,929.37**	**254,000.00**	**0.00**	**0.00**
--- Appropriations ---							
592-538-752.000	SUPPLIES/EQUIPMENT	0.00	0.00	4,751.43	3,104.86	0.00	0.00
592-538-804.000	PROF SER SOFTWA	0.00	0.00	0.00	2,500.00	0.00	0.00
592-538-829.000	STATE PERMITS	3,000.00	3,000.00	0.00	1,800.00	0.00	0.00
592-538-830.001	UTILITY LOCATING SERVICES	5,000.00	5,000.00	0.00	5,000.00	0.00	0.00
592-538-830.002	ENGINEERING SERVICES	26,600.00	26,600.00	20,913.19	45,000.00	0.00	0.00
592-538-830.003	OPERATION SERVICES	36,000.00	36,000.00	28,856.72	0.00	0.00	0.00
592-538-830.004	FINANCIAL CONSULTANT SERVICES	15,000.00	15,000.00	0.00	15,000.00	0.00	0.00
592-538-830.005	LEGAL SERVICES	15,000.00	15,000.00	13,990.50	15,000.00	0.00	0.00
592-538-830.006	AUDITOR SERVICES	2,000.00	2,000.00	0.00	2,000.00	0.00	0.00
592-538-830.008	ADMIN EXPENSE	15,000.00	15,000.00	6,860.00	3,150.00	0.00	0.00
592-538-851.100	POSTAGE - SEWER	400.00	400.00	147.00	400.00	0.00	0.00
592-538-855.000	OTHER SER/CHGS	0.00	0.00	2,590.65	2,000.00	0.00	0.00
592-538-995.000	TRANSFERS OUT	0.00	0.00	0.00	27,022.57	0.00	0.00
592-539-702.000	SALARIES & WAGES	15,000.00	15,000.00	1,455.29	5,000.00	0.00	0.00
592-539-705.000	EMPLOYER FICA CONTRIB	1,147.50	1,147.50	188.18	500.00	0.00	0.00
592-539-830.007	LIABILITY INSURANCE - SEWER	2,500.00	2,500.00	2,197.00	2,500.00	0.00	0.00
592-539-915.000	MEMBER/DUES	0.00	0.00	0.00	0.00	0.00	0.00
592-539-955.000	MISCELLANEOUS	0.00	0.00	334.79	500.00	0.00	0.00
592-539-968.100	EQUIPMENT DEPRECIATION	20,000.00	20,000.00	0.00	0.00	0.00	0.00
592-539-970.006	CAPITAL OUTLAY - SEWER	2,852.50	2,852.50	0.00	3,000.00	0.00	0.00
592-539-991.200	DEBT SERVICE - INTEREST	0.00	0.00	0.00	2,022.57	0.00	0.00
592-539-991.300	DEBT SERVICE - PRINCIPAL	0.00	0.00	0.00	0.00	0.00	0.00
592-540-752.000	SUPPLIES/EQUIPMENT	2,000.00	10,000.00	9,830.23	5,000.00	0.00	0.00
592-540-800.000	PROF/CONTRACT SERVICES/OPER. MAINT.	5,000.00	5,000.00	0.00	15,000.00	0.00	0.00
592-540-920.000	UTILITIES	3,000.00	14,000.00	9,981.22	10,000.00	0.00	0.00
592-540-931.000	REP/MAINT	10,000.00	2,000.00	1,740.00	2,000.00	0.00	0.00
592-540-942.000	EQUIPMENT RENTAL	2,000.00	2,000.00	0.00	1,000.00	0.00	0.00

592-540-970.006	CAPITAL OUTLAY - SEWER	40,000.00	29,000.00	0.00	30,000.00	0.00	0.00
592-540-991.100	DEBT SERVICE - PRINCIPAL	0.00	0.00	0.00	0.00	0.00	0.00
592-540-991.200	DEBT SERVICE - INTEREST	0.00	0.00	0.00	0.00	0.00	0.00
592-541-752.000	SUPPLIES/EQUIPMENT	2,000.00	3,100.00	3,072.54	3,500.00	0.00	0.00
592-541-800.000	PROF/CONTRACT SERVICES/OPER. MAINT.	5,000.00	5,000.00	0.00	30,000.00	0.00	0.00
592-541-920.000	UTILITIES	3,000.00	4,000.00	2,299.89	3,000.00	0.00	0.00
592-541-931.000	REP/MAINT	10,000.00	10,000.00	8,500.00	10,000.00	0.00	0.00
592-541-942.000	EQUIPMENT RENTAL	2,000.00	2,000.00	138.71	1,000.00	0.00	0.00
592-541-970.006	CAPITAL OUTLAY - SEWER	10,000.00	7,900.00	0.00	8,000.00	0.00	0.00
592-541-991.100	DEBT SERVICE - PRINCIPAL	0.00	0.00	0.00	0.00	0.00	0.00
592-541-991.200	DEBT SERVICE - INTEREST	0.00	0.00	0.00	0.00	0.00	0.00
Total Appropriations:		**253,500.00**	**253,500.00**	**117,847.34**	**254,000.00**	**0.00**	**0.00**
Net of Revenues & Appropriations	**Net of Revenues & Appropriations Fund 592:**	**0.00**	**0.00**	**(17,917.97)**	**0.00**	**0.00**	**0.00**

Copy of FY2024-25 Road Fund (Budget Prep)

GL Number	Description	2023-24 Original Budget	12/31/2023 Amended Budget	YTD As Of 12/31/2023	2024-25 PROPOSED	2024-25 BOARD	2024-25 APPROVED
Fund 204 - ROAD FUND							
--- Estimated Revenue ---							
204-000-402.000	CURRENT REAL PR	122,000	122,000	17,840	130,618		0
204-000-405.000	TAX AD FEE	0	0	0	0	0	0
204-000-411.000	DEL REAL P TAX	0	0	4,334	0	0	0
204-000-573.000	LOCAL COMMUNITY STABILIZATION SHARE	0	0	0	0	0	0
204-000-664.000	INTEREST INCOME	145	643	4,748	1,795		0
204-000-699.000	TRANSFER IN	6,200	6,200	0	90,000	0	0
Total Estimated Revenue:		**128,345**	**128,843**	**26,923**	**222,413**		**0**
--- Appropriations ---							
204-000-702.000	SALARIES & WAGES	1,517	1,517	1,115	1,600		0
204-000-705.000	EMPLOYER FICA CONTRIB	116	116	85	120		0
204-000-805.000	PROF SERV-AUDIT	560	560	0	575		0
204-000-855.000	OTHER SER/CHGS	0	0	0	0	0	0
204-000-930.000	REP/MAIN BRINE	8,029	8,300	8,288	8,500		0
204-000-934.002	REP/MAIN INTERI	118,122	118,350	118,332	211,000		0
204-000-955.000	MISCELLANEOUS	0	0	0	618	0	0
Total Appropriations:		**128,345**	**128,843**	**127,820**	**222,413**	**0**	**0**
Net of Revenues & Appropriations	**Net of Revenues & Appropriations Fund 204:**	**0**	**0**	**(100,898)**	**(0)**	**0**	**0**

GL Number	Description	2023-24 Original Budget	12/31/2023 Amended Budget	YTD As Of 12/31/2023	2024-25 PROPOSED	2024-25 BOARD	2024-25 APPROVED
Fund 286 ARPA FUND							
--- Estimated Revenue ---							
286-000-401.000	PREV YEAR-END	0	0	0	0	0	0
286-000-528.000	FEDERAL GRANTS - OTHER	67,017	67,017	0	0	0	0
286-000-665.000	INTEREST	0	0	5,444	5,500	0	0
286-000-666.000	DIVIDENDS	0	0	0	0	0	0
286-000-699.000	INTERFUND TRANSFERS IN	0	0	0	0	0	0
Total Estimated Revenue:		**67,017**	**67,017**	**5,444**	**5,500**	**0**	**0**
--- Appropriations ---							
286-000-802.000	EXPENDITURES	67,017	67,017	0	5,500	0	0
286-000-821.000	OTHER CONTRACTUAL SERVICES	0	0	0	0	0	0
286-000-977.000	MACHINERY & EQUIPMENT	0	0	0	0	0	0
286-000-984.000	SOFTWARE	0	0	0	0	0	0
286-000-995.000	TRANSFERS OUT	0	0	0	0	0	0
Total Appropriations:		**67,017**	**67,017**	**0**	**5,500**	**0**	**0**
Net of Revenues & Appropriations	**Net of Revenues & Appropriations Fund 286:**	**0**	**0**	**5,444**	**0**	**0**	**0**

Copy of FY2024-25 Fire Fund (Budget Prep)

GL Number	Description	2023-24 Original Budget	12/31/2023 Amended Budget	YTD As Of 12/31/2023	2024-25 PROPOSED	2024-25 BOARD	2024-25 APPROVED
Fund 206 - FIRE FUND							
--- Estimated Revenue ---							
206-000-401.000	FROM PREV YEAR-END	50,991.84	50,991.84	0.00	0.00	0.00	0.00
206-000-402.000	CURR REAL P TAX	242,150.93	242,150.93	35,433.60	259,422.00	0.00	0.00
206-000-402.100	CURR PROP TAX - EQUIPMENT	121,924.73	121,924.73	17,839.95	130,617.00	0.00	0.00
206-000-411.000	DEL REAL P TAX	0.00	0.00	8,608.86	0.00	0.00	0.00
206-000-411.100	DEL REAL TX FIRE APPARTUS	0.00	0.00	4,334.27	0.00	0.00	0.00
206-000-552.001	STATE GRANTS FIRE	3,500.00	3,500.00	3,500.00	1,750.00	0.00	0.00
206-000-573.000	LOCAL COMMUNITY STABILIZATION SHARE	0.00	0.00	0.00	0.00	0.00	0.00
206-000-573.100	LOCAL COMMUNITY STABILIZATION SHARE EQUI	0.00	0.00	0.00	0.00	0.00	0.00
206-000-664.000	INTEREST INCOME	0.00	0.00	7,773.34	0.00	0.00	0.00
206-000-671.000	MISCELLANEOUS	0.00	0.00	1,791.92	0.00	0.00	0.00
206-000-674.000	DONATIONS	0.00	0.00	3,500.00	0.00	0.00	0.00
206-000-676.009	MFR REIMBURSE	27,000.00	27,000.00	38,280.00	27,500.00	0.00	0.00
206-000-699.000	TRANSFER IN	0.00	0.00	0.00	0.00	0.00	0.00
Total Estimated Revenue:		**445,567.50**	**445,567.50**	**121,061.94**	**419,289.00**	**0.00**	**0.00**
--- Appropriations ---							
206-000-955.000	MISCELLANEOUS	0.00	0.00	0.00	0.00	0.00	0.00
206-000-995.000	TRANSFERS OUT	0.00	0.00	0.00	0.00	0.00	0.00
206-336-702.000	SALARIES & WAGES	95,000.00	95,000.00	62,434.00	95,000.00	0.00	0.00
206-336-702.002	SALARIES $ WAGES FIRE 2	0.00	0.00	0.00	0.00	0.00	0.00
206-336-703.000	PAYROLL EXPENSE	0.00	0.00	0.00	0.00	0.00	0.00
206-336-705.000	EMPLOYER FICA CONTRIB	7,267.50	7,267.50	4,833.61	7,267.00	0.00	0.00
206-336-721.000	UNIFORMS	1,500.00	4,500.00	3,830.55	5,000.00	0.00	0.00
206-336-725.000	MUTA EXPENSE	300.00	300.00	0.00	300.00	0.00	0.00
206-336-752.000	SUPPLIES/EQUIPMENT	17,000.00	17,000.00	11,438.43	20,000.00	0.00	0.00
206-336-800.000	PROF/CONTRACT SERVICES	2,000.00	1,700.00	274.50	2,000.00	0.00	0.00
206-336-802.000	PROF SERVICES - SOFTWARE	1,000.00	1,300.00	1,277.67	1,000.00	0.00	0.00
206-336-805.000	PROF SERV-AUDIT	600.00	600.00	0.00	600.00	0.00	0.00
206-336-828.000	BANK FEES	500.00	500.00	315.00	500.00	0.00	0.00
206-336-851.000	POSTAGE	300.00	300.00	225.35	800.00	0.00	0.00
206-336-855.000	OTHER SER/CHGS	0.00	0.00	(89.23)	0.00	0.00	0.00
206-336-880.000	COMM PROMOTION	1,500.00	1,500.00	1,631.19	2,000.00	0.00	0.00
206-336-900.000	PRINT/PUBLISH	1,000.00	1,000.00	0.00	1,000.00	0.00	0.00
206-336-910.000	EDUCATION/TRAINING	2,000.00	2,000.00	2,300.00	2,500.00	0.00	0.00
206-336-913.000	TRAVEL	5,000.00	5,000.00	4,238.58	1,000.00	0.00	0.00
206-336-915.000	MEMBER/DUES	500.00	500.00	75.00	100.00	0.00	0.00
206-336-920.000	UTILITIES	14,000.00	14,000.00	10,485.51	14,000.00	0.00	0.00
206-336-931.000	REP/MAINT	42,000.00	37,090.00	27,446.97	45,000.00	0.00	0.00
206-336-935.000	INSURANCE	26,000.00	27,510.00	27,509.60	26,000.00	0.00	0.00
206-336-940.000	RENTALS	0.00	0.00	0.00	0.00	0.00	0.00
206-336-940.001	HYDRANT RENTALS	0.00	0.00	0.00	0.00	0.00	0.00
206-336-941.000	CONTINGENCY	2,000.00	2,000.00	0.00	2,000.00	0.00	0.00
206-336-955.000	MISCELLANEOUS	1,000.00	1,100.00	1,119.22	1,440.00	0.00	0.00
206-336-968.000	DEPRECIATION AND DEPLETION	0.00	0.00	0.00	0.00	0.00	0.00
206-336-968.001	LOSS ON DISPOSAL CAPITAL ASSET	0.00	0.00	0.00	0.00	0.00	0.00
206-336-970.000	CAPITAL OUTLAY	101,000.00	101,300.00	101,289.05	68,882.00	0.00	0.00
206-336-991.000	DEBT SERVICE	0.00	0.00	1,770.59	0.00	0.00	0.00
206-336-991.100	DEBT SERVICE - PRINCIPAL	120,000.00	120,000.00	119,333.33	120,000.00	0.00	0.00
206-336-991.200	DEBT SERVICE - INTEREST	4,100.00	4,100.00	2,267.34	2,900.00	0.00	0.00
Total Appropriations:		**445,567.50**	**445,567.50**	**384,006.26**	**419,289.00**	**0.00**	**0.00**
Net of Revenues & Appropriations	**Net of Revenues & Appropriations Fund 206:**	**0.00**	**0.00**	**(262,944.32)**	**0.00**	**0.00**	**0.00**

Clerk's Report – 13 March 2024

Elections

- I would like to start out by thanking all of our dedicated election workers that worked the Presidential Primary. It was a long day and night. Everyone did an outstanding job. It was a pleasure to work with all of you. Again, a huge thank you for your time, hard work and commitment to the electoral process and the Pentwater Community.
- With that being said the Community of Pentwater also has something else to be really proud of for the Presidential Primary. Out of the other 17 municipalities in Oceana County, Pentwater Township had the highest voter turnout. We had 622 residents that voted of the 622, 383 were absentee voters and 27 utilized the 9 days of early voting at the County Building.
- We have 55 days until the next Election Day, which is Tuesday, May 7th.
- There is only 1 item on the Ballot and that is the Pentwater School millage.
- The Clerk's office will begin issuing and mailing Absentee Ballots on Thursday, March 28th along with be available in the Clerk's office if you want to stop by in person. Please make sure the Clerk's office has your correct address of where to send your absentee ballot.

- I would like to make you aware that there will be many groups asking you to sign petitions for ballot proposal, whether local issues or a constitutional amendment this Election Season. For Example, the 2 that I'm going to mention are getting a lot of attention. The first AxMITax,a group who has a petition for a constitutional amendment to eliminate all property taxes. The second Citizens for Choice whose mission statement is to retore local control over zoning regulations, with a petition to repeal part 8 of Public Act 233 of 2023. Just educate yourself and don't feel any pressure to sign anything you are not comfortable with. Like so many people ask us in the Clerk's office why do you have so much more work with the Elections now. And I say because of the passing of Proposal 2 in 2022 and most people don't even remember voting on it,

Proposal 22-2 A proposal to amend the state constitution to add provisions regarding elections. This proposed constitutional amendment would: • Recognize fundamental right to vote without harassing conduct; • Require military or overseas ballots be counted if postmarked by election day; • Provide voter right to verify identity with photo ID or signed statement; • Provide voter right to single application to vote absentee in all elections; • Require state-funded absentee-ballot drop boxes, and postage for absentee applications and ballots; • Provide that only election officials may conduct post-election audits; • Require nine days of early in-person voting; • Allow donations to fund elections, which must be disclosed; • Require canvass boards certify election results based only on the official records of votes cast.

The Transfer Station will be opening for the Season. It's first day of operation will Thursday April 4th. The Cemetery will also be opening for the Season, as always The Cemetery will open on April 1st.

Respectfully Submitted,

_____

Maureen Murphy

Bank Balances as of:	February 29, 2024	Interest
Township Funds		
Huntington Bank		
General Fund Checking:	$165,731	$29.00
Mi CLASS		
General Fund:	$14,277	$112.96
Road Fund	$172,652	$744.29
Hart-PTW Non-Motorized Trail Fund	$24,285	$104.68
Fund Balance Policy	$99,516	$429.00
ARPA Funds	$72,461	$312.38
General Fund **EDGE**	$156,210	$652.68
Total Township Funds	**$705,132**	**$2,384.99**
Fire Department Funds		
Huntington Bank		
Fire Dept Checking:	$130,168	
Mi CLASS		
Fire Department:	$132,554	$574.20
FD **EDGE**	$167,825	$718.87
Total Fire Department Funds	**$430,547**	
Sewer (Enterprise) Funds		
Shelby State Bank		
Sewer Checking:	$75,381	
Total Sewer Funds	**$75,381**	**$0.00**
Cemetery Funds		
Huntington Bank		
Cemetery Checking:	$154,785	
Mi CLASS		
Cemetery:	$245,488	$1,058.30
Cem **EDGE**	$36,489	$156.30
Total Cemetery Funds	**$400,273**	**$1,214.60**
Total All Funds	***$1,611,333***	**$3,599.59**

Pentwater Township Library
Director's Report
December 2023 /January and February 2024

Covid Test Kits—Another new order of test kits came in late January. We will have demand again around travel season in March. The new kits have a 2025 expiration date. So, they will be available when the last of the expanded expiration dates are gone and a small stack of the 2024's are gone.

Post Covid Library Patron Procedures—We are again requiring new application forms to be filled out for library card application renewals starting on January 2, 2024. During covid we would renew applications over the phone. We have had to return to the in-person procedure because people have moved and not updated addresses, phones and emails. One person that moved to Georgia called a few weeks ago and wanted to renew and she hasn't lived in Michigan for several years but loves our hoopla and Libby. She was disappointed not to be able to get these free services.

Programming in December /January/ February—We hosted a holiday concert with Santa, had afterschool programs with holiday crafts and cookie decorating in December. Many of the programs had small numbers of participants. Justin, Tammy and I went back over the Strategic Plan for events and added several other ways to get the word out about these free events and hope to see improvement in the number of participants in the future.

Book Clubs--Our two Library Book Clubs met during December, January, and February with a fair number of participations even with some of the regulars in others states during the winter.

Go Bags—If you are a user of Go Bags, the theme bags of books, DVD's and educational toys you will notice that the bags are behind the circulation desk in the closet. We needed to make room for our juvenile collection. We have set up a notebook with an inventory laminated sheet for each Go Bag, adults can see what is in the bag. At check out, the patron brings the sheet up to the Circ Desk, and the staff gets the bag out of the closet. The bags were heavy and when a lot of the bags were checked out the bag slid and fell off of the shelf.

Preschool Storytime has restarted—We have restarted Storytime on Fridays starting in January and have had a lot of fun and education projects to share. James, Olivia and I are sharing the duties. Our new name is Discovery Time.

Wishes—The three wishes from the Oceana County Foundation rewarded us with two wishes. One wish was $1000 from the Shepherd Foundation used $350 for portable CD and DVD players for our Library of Things. They will check out for a week. They will be used to play CD books or DVDs from our collection. From the same wish $650 to purchase a collection of STEM materials. The second wish was for$250 for books and literacy materials from Mrs. Kronlein Reading Fund.

State Aid Survey—The report was filed in the middle of January. They have added a new line to add passive activities, it wasn't required this year but will be next year. Many libraries including us, offer games, computers, toys, puzzles, contests, worksheets, coloring pages etc. and that we

will now track on a daily basis. The State Aid Survey is required along with several other factors to receive State Aid payments.

Quick Books—Our software package QuickBooks, that we purchase for accounting and payroll will be changing in the future to all on-line. The features on the new on-line package include direct deposit for payroll, something that the board said would be helpful. We will be changing over to the system soon but may need to write a few new policies as we move along with the program. I don't know our start date at this time. My main concern is the access available to cell phones and access to the program from anywhere.

Job Opening—We have an opening for Library Clerk Aide that has been advertised for several weeks. I will be interviewing soon, but I will still take applications for a week or more. Our employee has an elderly parent on the other side of the state that she is helping and didn't feel that she could continue working at the library.

Respectfully submitted,
Mary Barker, Director

PENTWATER FIRE DEPARTMENT
486 E Park St • PO Box 1117
Pentwater, MI 49449

Phone 231.869.5987 • Fax 231.869.8511
www.pentwaterfiredepartment.com

Monthly Meeting Agenda

Meeting Date: Wednesday, March 6, 2024 19:00
Meeting Location: Pentwater Fire Department
Call to Order

I. Pledge of Allegiance

II. Reading and Approval of Minutes
   a. Minutes from 2/7/24

III. Reports of Officers
   a. Treasurer Terry Cluchey

IV. Old Business
   a. By-Laws
   b. UAV
   c. Turnout gear grant
   d. Michigan Volunteer Fire Capacity grant
   e. New Millage

V. New Business

VI. Training

VII. Discussion on last month's calls

VIII. Adjourn

Secretary- Ray Hasil

PENTWATER FIRE DEPARTMENT
486 E Park St • PO Box 1117
Pentwater, MI 49449

Phone 231.869.5987 • Fax 231.869.8511
www.pentwaterfiredepartment.com

Monthly Meeting Minutes

Meeting Date: Wednesday, February 7, 2024 19:00
Meeting Location: Pentwater Fire Department
Call to Order

I. Pledge of Allegiance

II. Reading and Approval of Minutes
   a. Minutes from 1/3/24

III. Reports of Officers
   a. Treasurer Terry Cluchey
      i. Payroll- $25,150.00
      ii. Michigan CLASS- $134,279.70
      iii. Budget Funds- $61,561.24

IV. Old Business
   a. By-Laws- no update
   b. UAV- no update
   c. Turnout gear grant- we are awaiting a response from the State of Michigan.
   d. Michigan Volunteer Fire Capacity grant- paperwork just arrived today.

V. New Business
   a. Department elections for the positions of Fire Chief, Treasurer and MFR Coordinator were held tonight. Certified firefighter members eligible to vote tonight were Jonathan Hughart, Mike Barefoot, Mark Haynor, Adam Kokx, Ray Hasil, Aaron Boyko, Terry Cluchey, Kyle Dillingham, Brad VanDuinen and Oscar Esquivel. Probationary member Anna VanDuinen was also in attendance but is not yet certified and is not yet able to vote.
      i. A motion to nominate Jonathan Hughart to the position of Fire Chief by Mike Barefoot was seconded by Adam Kokx. A vote by members present was unanimously in favor.
      ii. A motion to nominate Terry Cluchey to the position of Treasurer by Kyle Dillingham was seconded by Adam Kokx. A vote by members present was unanimously in favor.
      iii. A motion to nominate Adam Kokx to the position of MFR Coordinator by Brad VanDuinen was seconded by Terry Cluchey. A vote by MFR certified members present (neither Anna

Secretary- Ray Hasil

PENTWATER FIRE DEPARTMENT
486 E Park St • PO Box 1117
Pentwater, MI 49449

Phone 231.869.5987 • Fax 231.869.8511
www.pentwaterfiredepartment.com

VanDuinen nor Aaron Boyko are MFR certified and were excluded from this vote) was unanimously in favor.

b. The appointments are not official until approved by the Pentwater Village Council and Pentwater Township Board.
c. New Millage- plans for a new millage were discussed. The many steps required are in motion but are not yet concrete. Much will happen between today and our next meeting on Wednesday, March 6.

VI. Training
a. There is a joint training tabletop exercise on February 19 with Riverton FD, both county emergency managers, 911 and Michigan DNR Fire Officers.

VII. Discussion on last month's calls: there were 18 medical and 2 fire calls for service in January.

VIII. Adjourn- a motion to adjourn by Aaron Boyko was seconded by Mike Barefoot.

Secretary- Ray Hasil

PENTWATER FIRE DEPARTMENT
486 E Park St • PO Box 1117
Pentwater, MI 49449

Phone 231.869.5987 • Fax 231.869.8511
www.pentwaterfiredepartment.com

Officer Meeting Minutes

Meeting Date: Wednesday, February 7, 2024 19:00
Meeting Location: Pentwater Fire Department
Call to Order

Please note- the agenda for the Officer Meeting is the same as the regular monthly meeting and items are often discussed at both meetings

I. Reading and Approval of Minutes
   a. There was no Officer Meeting on January 3, 2024.
   b. Minutes from 12/6/23

II. Reports of Officers
   a. Treasurer Terry Cluchey- will update at the regular meeting.

III. Old Business
   a. By-Laws
   b. UAV
   c. Turnout gear grant
   d. Michigan Volunteer Fire Capacity grant

IV. New Business
   a. Elections for the positions of Fire Chief, Treasurer and MFR Coordinator are tonight.
   b. New Millage- much was discussed regarding a new PFD millage. There are many details being worked through and we will have everything firmed up by our February meeting.
   c. Application- a new member application was discussed and an interview with the candidate took place. A motion by Jonathan Hughart to reject the application was seconded by Ray Hasil. Administrative officers unanimously voted against hiring the candidate but all agreed we will keep the resume on file for future consideration.

V. Training
   a. There is a joint training tabletop exercise on February 19 with Riverton FD, both county emergency managers, 911 and Michigan DNR Fire Officers.

VI. Discussion on last month's calls: there were 18 medical and 2 fire calls for service in January.

VII. Adjourn- a motion to adjourn by Mike Barefoot was seconded by Terry Cluchey.

Secretary- Ray Hasil

Rec Report – March 2024

Rec Program

Boys Basketball finished up on March 2nd and what a fantastic season it was for both the 3rd/4th Grade team and the 5th Grade team. They were dedicated from the start and showed so much growth in the short season we had. Next season will be one for the record books.

The deadline for Spring Soccer was March 8th, and so far, numbers are looking good for the season. (At the time this report was submitted, final team counts had yet to be calculated)

2023-2024 Can Drive Donations: $336.75
Can Drive Totals Since 2020: $5448.20
2023-2024 Rec Donations: $1575.00

Oceana Deep Dive

On February 22nd I attended the Oceana Deep Dive session for nonprofits. The session was geared towards introducing local nonprofits to each other and the resources that are available in Oceana County.

5 Year Parks and Rec Plan

The Parks and Rec Board met on March 6th for a Workshop. It was a great working session, we spent time discussing our parks, developing our questionnaire and outreach strategies and funding opportunities. The questionnaire will be available this week, we are looking at an approximate 6-week timeline on its availability and plan to have a Public Hearing towards the end of April.

Thank you,

Katie Anderson

Katie Anderson
Rec Director
Parks and Rec Board Chair

Pentwater Township
Deputy Supervisor, Zoning Administrator and Ordinance Enforcement Officer
Monthly Report – March 4, 2024

Board Members, the following is a summary of activities conducted by the Deputy Supervisor, Zoning Administrator and Ordinance Enforcement Officer for the month of February, 2024.

Deputy Supervisor - I worked with the Township Supervisor, Lynne Cavazos, and Township Attorney Mark Nettleton to:

- Prepare the Debt Service Schedule for the interfund loan from the General Fund to the Sewer Fund;
- Prepare a proposed Sewer Budget for the 2024-2025 Fiscal Year;
- Continue to work on the Capital Improvements Program (Plan) or CIP;
- Solicit a request for a proposal from Utility Financial Solutions for a Sanitary Sewer Rate Study; and,
- A Proposal for a Project Plan for submission to EGLE to access funding for Sanitary Sewer System upgrades for the Township South Sewer System.

Code Enforcement – Nothing significant to report at this time.

Planning Commission - The Planning Commission met on February 13, 2024 to:

1. Conduct a public hearing a recommend a Zoning Ordinance amendment for Section 3.11 of the Zoning Ordinance – Fences.
2. Continue the discussion on possible future Zoning Ordinance amendments for retaining walls.
3. Approve an addition to the non-conforming house at 6121 W. Longbridge Rd., and;
4. Discuss the Capital Improvements Plan (CIP) including the recommendation for Paul DeGregorio and Heather Douglas to be members of the CIP Review Committee.

Zoning Board of Appeals - The Zoning Board of Appeals did not meet in February, 2024.

Zoning Permits – One Zoning Permit was issued in January, 2024 as follows:

1. ZP 3473 was issued to Visscher Construction for the raising of an existing roof to construct a full second-story and a single-story screen enclosed front porch on the existing home at 6121 W. Longbridge Rd.

Other Comments - None

Sincerely,

Keith J. Edwards

Pentwater Township
Deputy Supervisor, Zoning Administrator & Ordinance Enforcement Officer

Township of Pentwater Assessor

500 N Hancock St.
PO Box 512
Pentwater MI 49449
Phone: (231) 869-6231 Ext 228

Monthly Township Report
March 2024

Board of Review:

- The March Board of Review will meet on Tuesday, March 12th 9 am to 3 pm and Thursday, March 14 3-9 pm. Please call the Assessor to schedule an appointment.

Michigan Tax Tribunal:

- There are no pending MTT tribunals.
- The deadline for filing a **Commercial/Industrial** petition is May 31, 2024
- The deadline for filing a **Residential** petition is July 31, 2024.

For Residential properties, petitioners must first appeal to the March Board of Review

Miscellaneous:

- I have been entering deeds, PTAs, and PREs as they come in.
- The rate of inflation was calculated at 5.1% for 2024 so the 5% increase cap was used for the 2024 Taxable Value increase.
- Assessed Value goes up and down with the market and has no yearly cap on increases. The real estate market is still very high in this area, which is why Assessed Values did increase again for 2024.

If you have any questions, please let me know!

Barbie Eaton

Sincerely,
Barbie Eaton, MAAO
Pentwater Township Assessor

UB a)

PENTWATER TOWNSHIP TRANSFER STATION
6184 N. 68th Ave (next to Dollar General)
DATE & FEE SCHEDULE (Revised March 2024)

HOURS OF OPERATION
Thursday and Saturday 9:00 a.m. – 5:00 p.m.
April thru October
RESIDENTIAL USERS ONLY – NO COMMERCIAL USERS

ITEM	FEE	COMMENTS
Pickup Truck with Garbage (No Shingles) Short Bed – 6' Long Bed – 8' Trailer up to 6' x 10'	 $30 $50 $40	
Pickup Truck with Garbage (Shingles) Short Bed – 6' Long Bed – 8' Trailer- 6'-8'	 $40 $60 $60	
Pick Up Truck overloaded with Garbage	$50	Pick-up Truck – Heaped with Garbage
All Garbage Bags (S, M, L)	$3	
Television	$10	
Small Appliances (microwave/small refrigerator/freezer	$20	
Propane Cylinders – All Sizes	$2	
Commercial Cardboard	$12.50	Per cubic yard
Refrigerators/Freezers	$30	Must be tagged with "Freon Removed"
Large Appliances	$30	
Sofa - Small	$20	$5 extra for small sofa with bed
Sofa – Large	$25	$5 extra for large sofa with bed
Chairs	$10	
Mattress or Box Springs	$20	
30 Gallon Barrel with contents 50 Gallon Barrel with contents	$10 $20	No hazardous waste No hazardous waste

THE FOLLOWING RECYCLE MATERIALS ARE ACCEPTED - $3 per person per visit:

Paper, cardboard, #1 & #2 plastic, metal, glass. *No Styrofoam!*

During November 1st – March 31st, residents may also deposit the same materials at the Oceana County Transfer Station, East M-20

THE FOLLOWING RESIDENTIAL BUILDING MATERIALS NOW BEING ACCEPTED:

SHINGLES: NO MORE THAN ONE PICK-UP TRUCK LOAD ACCEPTED Cost: See Above Chart

SIDING: NO LONGER THAN 8' IN LENGTH and BOARDS: NO LONGER THAN 8' IN LENGTH

THE FOLLOWING MATERIALS ARE *NOT ACCEPTED*:

CEMENT BLOCK & CONCRETE: NOT ACCEPTED, CONTACT KEN ADAMS & SONS EXCAVATING@ 231-869-5928

TIRES: CONTACT OCEANA COUNTY TRANSFER STATION 1615 E. M-20, SHELBY

HAZARDOUS WASTE OF ANY TYPE: See note below:

Hazardous waste is not accepted; however, residents may drop off hazardous materials, including pharmaceuticals and electronics at the Annual Household Hazardous Waste Collection Day at Hart DPW building on the 3rd Saturday of August from 9:00 a.m. to 2:00 p.m. Saturday August 17, 2024.

Residents may also dispose of brush, leaves and yard waste at the site for no charge during the hours the Transfer Station is open. Residents much check In with Attendant before unloading. Unloading must be done is the appropriate areas.
COMMERCIAL YARD WASTE HAULERS ARE PROHIBITED.

FREE Days: 2024 ·Saturday, June 15th & Saturday, October 5th

S:\TRANSFER STATION\TRANSFER STATION FEE SCHEDULE 3-8-24.docx

NB (A)

TOWNSHIP OF PENTWATER

COUNTY OF OCEANA, MICHIGAN

At a regular meeting of the Township Board of the Township of Pentwater, held at the Pentwater Township Hall, 500 N. Hancock Street, within the Township, on the 13th day of March, 2024 at 6:00 p.m.

PRESENT: Members:

ABSENT: Members:

The following resolution was offered by _____ and supported by Member _____:

RESOLUTION NO. 2024-05

RESOLUTION APPROVING ANNUAL TOWNSHIP BUDGET AND DETERMINING PROPERTY TAX RATES FOR SUPPORT OF BUDGET

WHEREAS, the Uniform Budgeting and Accounting Act, Public Act 2 of 1968, as amended by Public Act 621 of 1978 requires that the Township adopt an annual budget, after public hearing;

WHEREAS, the Township Board has convened a public hearing on the proposed Pentwater Township budget, which includes budgets for the Township Fire Department, Township Cemetery, Township Road, Township Sewer, and Township ARPA, and Township General Fund for the fiscal year commencing April 1, 2023, after the publication of public notice as required by law;

WHEREAS, the published notice of the Township Board public hearing on the annual budget stated that the Township property tax millage rate proposed to be levied to support the proposed budget would be a subject of the budget hearing; and

WHEREAS, the Township Board has considered the proposed annual budget for the above-stated fiscal year, has considered comments thereon made at the public hearing and has otherwise considered the budget and the property tax rates for 2023.

NOW, THEREFORE, IT IS RESOLVED AS FOLLOWS:

1. The Township Board hereby adopts the Pentwater Township budget, including the Township Fire Department, Township Cemetery, Township Road, Township Sewer, Township ARPA, and Township General Fund, for fiscal year 2024, being the fiscal year commencing April 1, 2024, and ending March 31, 2025.

2. The Township Board shall cause to be levied and collected general property tax on all real and personal property within the Township upon the property tax assessment roll,

except property exempt from taxation, at the rate indicated below, or such adjusted or reduced millage amount as may be required by operation of law:

Allocated Operating millage	-	1.2153 mills
Voted Library millage	-	0.8133 mills
Voted Cemetery millage	-	0.3401 mills
Voted Fire millage	-	0.9837 mills
Voted Fire Apparatus	-	0.4953 mills
Voted Roads	-	0.4953mills
Total	-	4.3430 mills

3. The Township property tax rate indicated above shall be subject to final determination by the Township Board, following any required Headlee amendment reduction or such other adjustment as may be required or authorized by law.

4. Township expenditures pursuant to the annual budget, the amendment of the budget, the transfer of funds thereunder and other matters pertaining to financial operations pursuant to the budget shall be subject to applicable provisions of the Uniform Budgeting and Accounting Act.

AYES:

NAYS:

ABSTAIN:

RESOLUTION DECLARED:

_____

Maureen Murphy, Township Clerk

I hereby certify that the foregoing is a true and complete copy of a Resolution adopted by the Township Board of the Township of Pentwater at a regular meeting thereof held on the date first stated above, and I further certify that public notice of such meeting was given as provided by law.

_____

Maureen Murphy, Township Clerk

NB-(B)

TOWNSHIP OF PENTWATER

COUNTY OF OCEANA, MICHIGAN

At a regular meeting of the Township Board of the Township of Pentwater, held at the Pentwater Township Hall, 500 N. Hancock Street, within the Township, on the 13th day of March 2024 at 6:00 p.m.

PRESENT: Members:

ABSENT: Members:

The following resolution was offered by Member _____ and seconded by Member _____:

RESOLUTION NO. 2024-06

RESOLUTION APPROVING FY 2024-25 SALARIES AND PER DIEM

WHEREAS, pursuant to MCLA 41.95(3), which provides that in a township that does not hold an annual meeting, the salary for officers composing the township board shall be determined by the township board, and

WHEREAS, the Board of Pentwater Township deems it desirable to establish the salary of the Township Supervisor, Treasurer, Clerk and the Per Diem of the Trustees to ensure compensation for these positions remain equitable and commensurate with the duties of said elective office.

THEREFORE, BE IT RESOLVED, that as of April 1, 2024, the salaries and per diem for the following township offices shall be:

- Supervisor - $37,437 per year
- Treasurer - $37,437 per year
- Clerk - $37,437 per year
- Trustee - $141.14 per meeting

AYES:
NAYS:
ABSTAIN:

RESOLUTION DECLARED:

_____
Maureen Murphy, Township Clerk

I hereby certify that the foregoing is a true and complete copy of a Resolution adopted by the Township Board of the Township of Pentwater at a regular meeting thereof held on the date first stated above, and I further certify that public notice of such meeting was given as provided by law.

_____

Maureen Murphy, Township Clerk

NB(C)

TOWNSHIP OF PENTWATER

COUNTY OF OCEANA, MICHIGAN

At a regular meeting of the Township Board of the Township of Pentwater, held at the Pentwater Township Hall, 500 North Hancock Street, within the Township, on the 13th day of March 2024 at 6:00 p.m.

PRESENT: Members:
ABSENT: Members:

The following resolution was offered by Member _____ and seconded by Member _____:

RESOLUTION NO. 2024-07

RESOLUTION REGARDING DESIGNATION OF BANK DEPOSITORIES FOR PENTWATER TOWNSHIP FUNDS FOR FY 2024-2025

Whereas, the Pentwater Township Board of Trustees has the authority to select certain financial institutions for deposit of Township funds, and

Whereas the Pentwater Township Board of Trustees prefers to utilize local financial institutions for deposit of its funds.

Now therefore be It resolved that the Township Treasurer is authorized to deposit and invest Township funds in the following financial institutions: Huntington Bank, Michigan CLASS, Shelby State Bank, and Consumers Credit Union for FY 2024-2025.

AYES:

NAYS:

RESOLUTION DECLARED:

_____
Maureen Murphy, Township Clerk

I hereby certify that the foregoing is a true and complete copy of a Resolution adopted by the Township Board of the Township of Pentwater at a regular meeting therof held on the date first stated above, and I further certify that public notice of such meeting was given as provided by law.

_____
Maureen Murphy, Township Clerk

NB d)

TOWNSHIP OF PENTWATER

COUNTY OF OCEANA, MICHIGAN

At a regular meeting of the Township Board of the Township of Pentwater, held at the Pentwater Township Hall, 500 North Hancock Street, within the Township, on the 13th day of March 2024 at 6:00 p.m.

PRESENT: Members:

ABSENT: Members:

The following resolution was offered by Member _____ and seconded by Member _____:

RESOLUTION NO. 2024-08

RESOLUTION REGARDING AUTHORIZATION TO BUY AND SELL PROPERTY FOR FY 2024-2025

Whereas, pursuant to MCL 41.2, townships have the authority to purchase and sell property with public funds, and

Whereas, the Pentwater Township Board of Trustees may wish to exercise such authority;

Now Therefore Be It Resolved that the Pentwater Township Board of Trustees is hereby authorized to purchase or sell property with public funds during FY 2024-2025.

AYES:

NAYS:

RESOLUTION DECLARED:

_____
Maureen Murphy, Township Clerk

I hereby certify that the foregoing is a true and complete copy of a Resolution adopted by the Township Board of the Township of Pentwater at a regular meeting therof held on the date first stated above, and I further certify that public notice of such meeting was given as provided by law.

_____
Maureen Murphy, Township Clerk

NTB(E)

TOWNSHIP OF PENTWATER

COUNTY OF OCEANA, MICHIGAN

At a regular meeting of the Township Board of the Township of Pentwater, held at the Pentwater Township Hall, 500 North Hancock Street, within the Township, on the 13th day of March 2024, at 6:00 p.m.

PRESENT: Members:

ABSENT: Members:

The following resolution was offered by Member _____ and seconded by Member _____:

RESOLUTION NO. 2024-09

RESOLUTION APPROVING FY 2024-2025 NON-ELECTED EMPLOYEES WAGE & SALARY SCHEDULE

WHEREAS, townships have the authority to establish wages and salaries for non-elected employees, and

WHEREAS, the board of Pentwater Township deems is desirable to establish the salary and wages of its non-elected employees to ensure compensation remains equitable and commensurate with the duties of the respective positions;

NOW THEREFORE BE IT RESOLVED, that as of April 1, 2024, the salary for non-elected employees of Pentwater Township represent a 5.0% increase as follows:

Zoning Administrator – appointed (2 days)	$24,289	annually
Cemetery Sexton - appointed	$18,787	annually
Assessor - appointed	$57,414	annually
Janitorial Service	$284.09	Bi-monthly
Deputy Supervisor/Sewer Administrator	$21.00	hourly
Deputy Clerk	$21.00	hourly
Deputy Treasurer	$21.00	hourly
Board of Review Chair	$18.85	hourly
Board of Review Member	$17.95	hourly
Board of Review Recording Secretary	$18.85	hourly
Election Board Chair	$18.85	hourly
Election Inspector	$18.56	hourly
Transfer Site Attendant	$20.90	hourly
Cemetery Sexton Assistant & Extra Help	$18.56	hourly
Township Board Recording Secretary	$68.18	Per meeting
ZBA Recording Secretary	$68.18	Per meeting

Planning Comm. Recording Secretary	$68.18	Per meeting
Planning Commission Chair	$108.40	per meeting
Planning Commission Member	$86.72	per meeting
Road Committee Chair	$108.40	per meeting
Board of Review Chair (Organizational Mtg.)	$108.40	per meeting
Board of Review Member (Organizational Mtg.)	$86.72	per meeting
Road Committee Member	$86.72	per meeting
Zoning Board of Appeals Chair	$108.40	per meeting
Zoning Board of Appeals Member	$86.72	per meeting

AYES:

NAYS:

ABSTAIN:

RESOLUTION DECLARED:

_____

Maureen Murphy, Township Clerk

I hereby certify that the foregoing is a true and complete copy of a Resolution adopted by the Township Board of the Township of Pentwater at a regular meeting thereof held on the date first stated above, and I further certify that public notice of such meeting was given as provided by law.

_____

Maureen Murphy, Township Clerk

NB F)

RESOLUTION NO. 2024-10

Resolution of Support
Michigan Township Participating Plan Grant Application

WHEREAS the Pentwater township Board wishes to apply for a Risk Reduction Grant through the Michigan Township Participating Plan (Par Plan) to assist in purchasing/funding **3 Bushnell Trail Cameras, 3 Bushnell Security Boxes, 1 SanDisk 32 GB 3-Pack Memory card, and 1 set of URPOWER Solar Motion Sensor Outdoor Security Lights.**

WHEREAS the Pentwater Township Board is seeking a grant contribution of **$861.76.**

NOW, THEREFORE, BE IT RESOLVED, that the Pentwater Township Board supports submittal of an application to the Michigan Township Participating Plan for a **$861.76** grant to assist in funding **3 Bushnell Trail Cameras, 3 Bushnell Security Boxes, 1 SanDisk 32 GB 3-Pack Memory card, and 1 set of URPOWER Solar Motion Sensor Outdoor Security Lights.**

Mortion by DOUGLAS seconded by FLYNN, the Supervisor, Lynne Cavazos declared the motion adopted. The following voted:

Yeas: CAVAZOS, MURPHY, DOUGLAS, FLYNN

Nays: NONE

Absent: HOLUB

CERTIFICATION

I, MAUREEN MURPHY, the Pentwater Township Clerk, hereby certify that the foregoing is a true and original copy of the resolution adopted by the ***regular scheduled board meeting on March 13, 2024*** meeting **at 6:00 PM**, which was held in accordance with the Open Meetings Act of the State of Michigan.

_____

Maureen Murphy, Pentwater Township Clerk

~~MASTER~~
NB (F) CONT.

The Pentwater Township Transfer Station is a public facility located in a remote wooded area about 3 miles away from the Pentwater Township Office. The Transfer Station property is The Pentwater Township Transfer Station is a public facility located in a remote wooded surrounded on all sides by an 8 foot metal fence with a metal gate that is locked to incoming traffic when not open to the public. A second metal gate and fencing surround the storage shed and equipment. There is currently no electricity at the Transfer Station Site and no cameras or motion lights to detect unwanted visitors.

The Township proposes to purchase 4 solar/battery back-up trail cameras to monitor activity within and around the Transfer Station area during the hours the station is closed. Two of the cameras would be mounted inside the inner fenced in area to monitor the storage shed and the area near the front-end loader. A third camera would be mounted outside the inner fenced area and a fourth near the Entrance Gate to monitor anyone at the locked gate at the top entrance to the station. Signs would also be posted to alert intruders that monitoring devices are in place.

In addition, we would mount 2 Solar operated motion lights to illuminate the area within the fenced in area – one on top of the storage shed and another near the front-end loader.

Describe how this project will specifically reduce risk and exposure.

The Transfer Station is open to the public on Thursdays and Saturdays - 9:00 AM – 5:00 PM from April 1st until October 31st each year and Saturdays during the month of November for disposal of leaves, brush, and yard waste.

The Transfer Station was recently broken into sometime during the month of January (2024). The vandals gained access by climbing over the metal fence in the wooded area in the back of the station. The storage shed, inside the fenced area, was broken into and a variety of items were taken along with 15 gallons of diesel fuel funneled from the front-end loader stored inside the fenced area. An investigation was conducted by the Michigan State Police and a report was filed.

The addition of 4 solar/battery back-up trail cameras would assist with monitoring the gated area where valuable items are stored and the gated top entrance to the station. In addition, solar motion lights would illuminate the interior fence in area and reduce the risk of vandals entering a completely dark area with no surveillance.

Describe the Benefits of the Project

Utilizing the Risk Reduction Gran Program funds to assist Pentwater Township to enhance security at the Pentwater Township Transfer Station and prevent intruders from entering the Transfer Station and into the fenced in area in complete darkness. It is important to increase surveillance at the Transfer Station and reduce the possibility of future break-ins and vandalism. In addition, it would be costly and dangerous to the storage shed, equipment and surrounding wooded area were to be set on fire. There has been a fire inside the Transfer Station in the past.

Checkout (10 items)

1 Shipping address

Lynnette M. Cavazos
536 E Lake St
Pentwater, Michigan 49449
Add delivery instructions

Change

2 Payment method

Paying with Amazon Store Card 6729
Earn 5% back
Billing address: LYNNETTE CAVAZOS, 536 E L...

Change

Add a gift card or promotion code or voucher

Enter code Apply

Apply Amazon Prime Store Card Rewards $193.94
(193.94 points) available

3 Review items and shipping

Choose Amazon Day Delivery to get **6% back** on eligible items in this order using your **Prime Store Card** or **Amazon Prime Secured Card**.

Arriving Mar 13, 2024 If you order in the next 8 hours and 6 minutes (Details)
Items shipped from Amazon.com

Bushnell Trail Camera Security Box Non-Cellular Game Cameras, Tan
$42.58
& FREE Returns
Qty: 3
Sold by: Amazon.com Services, Inc
Gift options not available
Best price

Choose your Prime delivery option:
- Tuesday, Mar 12 and Wednesday, Mar 13
  FREE Prime Delivery
- Wednesday, Mar 13
  FREE Delivery in fewer trips to your address
- Wednesday, Mar 13 and Wednesday, Mar 20
  FREE Amazon Day Delivery
  Fewer boxes, fewer trips.
  Change delivery day

Get **6% back** on eligible items using your **Prime Store Card** or **Amazon Prime Secured Card**. Details

URPOWER Solar Lights Outdoor, 40 LED Motion Sensor Security Lights Solar Flood Lights Waterproof Solar Powered Outdoor Lights for Backyard, Fence, Deck, Patio, Garage (4 Pack)
$35.99
& FREE Returns
Qty: 2
Sold by: URPOWER Group
See order summary for discounts applied
Add gift options
Best price

Arriving Mar 12, 2024 - Mar 13, 2024
Items shipped from Amazon.com

Bushnell Trail Camera CORE S-4K, No-Glow Game Camera with 4K Video and 1.5" Color Viewscreen

Choose your Prime delivery option:
- Tuesday, Mar 12 - Monday, Mar 18
  FREE Prime Delivery

Place your order

By placing your order, you agree to Amazon's privacy notice and conditions of use.

Order Summary

Items (10):	$819.30
Shipping & handling:	$0.00
Buy more, save 4%:	-$2.88
Promotion Applied:	-$3.60
Total before tax:	$812.82
Estimated tax to be collected:	$48.94
Order total:	**$861.76**

Qualifying offers:
- Buy more, save 4%
- Promotion Applied

How are shipping costs calculated?

Prime shipping benefits have been applied to your order.

$149.93
& FREE Returns
Qty: 4
Sold by: KA Product Services
Add gift options

S

Arriving Mar 16, 2024 - Mar 18, 2024

Items shipped from Amazon.com

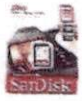

SanDisk 32GB 3-Pack Ultra SDHC UHS-I Memory Card (3x32GB) - SDSDUN4-032G-GN6IM
$19.86 & FREE Returns
Qty: 1
Sold by: MemoryWhiz
Add gift options

Best price

Place your order

Order total: $861.76

By placing your order, you agree to Amazon's privacy notice and conditions of use.

*Why has sales tax been applied? See tax and seller information.

Need help? Check our Help pages or contact us

For an item sold by Amazon.com: When you click the "Place your order" button, we'll send you an email message acknowledging receipt of your order. Your contract to purchase an item will not be complete until we send you an email notifying you that the item has been shipped.

Important information about sales tax you may owe in your state

You may return new, unopened merchandise in original condition within 30 days of delivery. Exceptions and restrictions apply. See Amazon.com's Returns Policy.

Need to add more items to your order? Continue shopping on the Amazon.com homepage.

$149.93
& FREE Returns
Qty: 4
Sold by: KA Product Services
Add gift options

Arriving Mar 16, 2024 - Mar 18, 2024
Items shipped from Amazon.com

SanDisk 32GB 3-Pack Ultra SDHC UHS-I Memory Card (3x32GB) - SDSDUN4-032G-GN6IM
$19.86 & FREE Returns
Qty: 1
Sold by: MemoryWhiz
Add gift options

Best price

Place your order

Order total: $861.76
By placing your order, you agree to Amazon's privacy notice and conditions of use.

*Why has sales tax been applied? See tax and seller information.

Need help? Check our Help pages or contact us

For an item sold by Amazon.com: When you click the "Place your order" button, we'll send you an email message acknowledging receipt of your order. Your contract to purchase an item will not be complete until we send you an email notifying you that the item has been shipped.

Important information about sales tax you may owe in your state

You may return new, unopened merchandise in original condition within 30 days of delivery. Exceptions and restrictions apply. See Amazon.com's Returns Policy.

Need to add more items to your order? Continue shopping on the Amazon.com homepage.

NB H)

PENTWATER TOWNSHIP
JOURNAL ENTRY
JE: 1326

Post Date: 03/31/2024
Entry Date: 03/07/2024
Description: Q4 2023/24 GENERAL FUND AMENDMENT

Entered By: SUPERVISOR
Journal: BA

GL #	Description	Increase/(Decrease)
101-171-702.001	DEPUTY WAGES	1,602.97
101-171-913.000	TRAVEL	300.00
101-215-707.000	PAID TIME OFF	250.00
101-215-955.000	MISCELLANEOUS	100.00
101-253-851.000	POSTAGE	500.00
101-253-860.000	TRAVEL EXPENSES	500.00
101-253-910.000	EDUCATION/TRAINING	(950.00)
101-253-913.000	TRAVEL	100.00
101-253-955.000	MISCELLANEOUS	150.00
101-265-705.000	EMPLOYER FICA CONTRIB	100.18
101-265-706.000	CUSTODIAL WAGES	300.00
101-265-727.000	TWP OFFICE SUPPLIES	200.00
101-265-805.000	PROF SERV-AUDIT	2,000.00
101-265-854.000	COPYING	300.00
101-265-931.000	REP/MAINT BUILDING	100.00
101-265-935.000	INSURANCE/BONDS	250.00
101-265-970.003	CAP OUT OTHER	(10,616.43)
101-526-940.000	RENTALS	2,600.00
101-526-956.000	MISCELLANEOUS	20.00
101-701-702.000	FROM	450.00
101-701-705.000	EMPLOYER FICA CONTRIB	123.28
101-702-802.001	PROF SER ATTY	1,000.00
101-703-900.000	PRINT/PUBLISH	550.00
101-703-955.000	MISCELLANEOUS	70.00
	Revenue Change:	0.00
	Expenditure Change:	0.00
	Budgeted Change To Fund Balance:	0.00

APPROVED BY: _____

PENTWATER TOWNSHIP
JOURNAL ENTRY
JE: 1327

Post Date: 03/11/2024
Entry Date: 03/11/2024
Description: Q4 2023/24 CEMETERY FUND

Entered By: SUPERVISOR
Journal: BA

GL #	Description	Increase/(Decrease)
209-567-702.000	SALARIES & WAGES	0.05
209-567-806.000	COLUM PLAQUES	950.00
209-567-810.000	FOUNDATION EXP	100.00
209-567-828.000	BANK FEES	150.00
209-567-920.000	UTILITIES	800.00
209-567-970.000	CAPITAL OUTLAY	(2,000.05)
	Revenue Change:	0.00
	Expenditure Change:	0.00
	Budgeted Change To Fund Balance:	0.00

APPROVED BY: _____

PENTWATER TOWNSHIP
JOURNAL ENTRY
JE: 1325

Post Date: 03/31/2024
Entry Date: 03/07/2024
Description: Q4 2023/24 CEMETERY BUDGET AMENDMENT

Entered By: GLENN
Journal: BA

GL #	Description	Increase/(Decrease)
209-567-806.000	COLUM PLAQUES	950.00
209-567-810.000	FOUNDATION EXP	60.00
209-567-828.000	BANK FEES	150.00
209-567-920.000	UTILITIES	800.00
209-567-935.000	INSURANCE	1,900.00
209-567-970.000	CAPITAL OUTLAY	(3,860.00)
	Revenue Change:	0.00
	Expenditure Change:	0.00
	Budgeted Change To Fund Balance:	0.00

APPROVED BY: _____

PENTWATER TOWNSHIP
JOURNAL ENTRY
JE: 1328

Post Date: 03/11/2024
Entry Date: 03/11/2024
Description: Q4 2023/24 FIRE FUND

Entered By: SUPERVISOR
Journal: BA

GL #	Description	Increase/(Decrease)
206-336-800.000	PROF/CONTRACT SERVICES	(1,490.00)
206-336-880.000	COMM PROMOTION	140.00
206-336-910.000	EDUCATION/TRAINING	450.00
206-336-935.000	INSURANCE	100.00
206-336-955.000	MISCELLANEOUS	800.00
	Revenue Change:	0.00
	Expenditure Change:	0.00
	Budgeted Change To Fund Balance:	0.00

APPROVED BY: _____

PENTWATER TOWNSHIP
JOURNAL ENTRY
JE: 1331

Post Date: 03/31/2024
Entry Date: 03/11/2024
Description: Q4 2023/24 SEWER FUND

Entered By: SUPERVISOR
Journal: BA

GL #	Description	Increase/(Decrease)
592-000-699.000	TRANSFER IN	1,000.00
592-538-752.000	SUPPLIES/EQUIPMENT	5,200.00
592-538-804.000	PROF SER SOFTWA	2,000.00
592-538-829.000	STATE PERMITS	300.00
592-538-830.001	UTILITY LOCATING SERVICES	(5,000.00)
592-538-830.004	FINANCIAL CONSULTANT SERVICES	(15,000.00)
592-538-830.005	LEGAL SERVICES	5,000.00
592-538-830.008	ADMIN EXPENSE	(5,000.00)
592-538-851.100	POSTAGE - SEWER	(22.57)
592-538-855.000	OTHER SER/CHGS	3,000.00
592-538-995.000	TRANSFERS OUT	27,022.57
592-539-702.000	SALARIES & WAGES	(11,500.00)
592-539-705.000	EMPLOYER FICA CONTRIB	(647.50)
592-539-955.000	MISCELLANEOUS	500.00
592-539-970.006	CAPITAL OUTLAY - SEWER	147.50
592-540-752.000	SUPPLIES/EQUIPMENT	(5,000.00)
	Revenue Change:	1,000.00
	Expenditure Change:	1,000.00
	Budgeted Change To Fund Balance:	0.00

APPROVED BY: _____

NB L&M)

MEMORANDUM

To: Lynne Cavazos, Township Supervisor

From: Keith Edwards, Zoning Administrator

Date: March 8, 2024

Subject: Reappointments to the Township Planning Commission and ZBA

Currently there are two positions on the Planning Commission that expire on March 31, 2024 – Terry Cluchey and Patrick Hooyman. Both have demonstrated appreciable value with insight and service to the Planning Commission and Terry also served on the Master Plan Committee and is my Housing Officer.

Randy Hepworth's term on the Zoning Board of Appeals (ZBA) also expires on March 31, 2024. He is currently the Vice Chairperson of the ZBA and we are counting on him to chair the next ZBA meeting, scheduled for April 11, 2024. Randy's history with the Township and as a local Surveyor have demonstrated to be very valuable to the ZBA.

Thus, please consider appointing Terry Cluchey and Patrick Hooyman to another 3-year term on the Planning Commission, and Randy Hepworth to the ZBA. These terms would then expire March 31, 2026.

NB(0)

Managing Director
Mark Timmer

MEMORANDUM

Date: February 15, 2024

To: Township Officials

Re: Brine Packet/Memo and Brine Contract

This memo is to explain the 2024 brine program. Michigan Chloride Sales (MCS) and Great Lakes Chloride Sales (GLC) are the two vendors who bid on brine again this year and meet the specifications for Calcium Chloride (CaCl2). These are the only approved vendors; no permits will be given for any other brining for roads in Oceana County. The application rate for GLC (38%) is 2,000 gallons per mile compared with MCS CaCl2 (~20%) 2,500 gallons per mile. The lower application rate in gallons for GLC is based on the brine having a higher concentration of CaCl2 (~38%).

The current economy with a shortage of parts and increased fuel prices has increased the price of the application rate to .12/gallon (12 cents per gallon). Each township will be billed for the application rate (cost per gallons) and half of the cost of the actual gallons used for the brine you select, while the Road Commission is still paying the other half of the cost of the actual gallons of brine used.

The *ACTUAL* Township prices for brine are as follows:

Michigan Chloride Sales **.21/gallon actual brine cost**

.21/gallon/2 = .105/gallon + .12/gallon application rate =

$.225/gallon applied Actual Township Price

Great Lakes Chloride .581/gallon actual brine cost

.581/gallon/2 = .2905/gallon + .12/gallon application rate =

$.4105/gallon applied Actual Township Price

Our foremen will work with you to update maps. We recommend making double passes on all roads unless they are truly one lane width, otherwise you will experience dusty conditions. Going to double passes will increase the amount of gallons used, and increase the cost, but dramatically reduce the citizen complaints and improve dust control and help retain the aggregate on gravel roads.

An ***example*** of the Township Cost for each vendor based on brining 30 miles is illustrated below:

Michigan Chloride Sales (MCS)

30 miles X 2500 gal/mile = 75,000 gal X $.225/gal = $16,875 TWP Cost for 1st brining

30 miles X 2500 gal/mile = 75,000 gal X $.225/gal = $16,875 TWP Cost for 2nd brining

60 miles total = $33,750 Township Cost for two brinings (includes .12/gal application rate) 150,000 gallons total

Great Lakes Chloride

30 miles X 2000 gal/mile = 60,000 gal X $.4105/gal = $24,630 TWP Cost 1 (one) brining

30 miles total = $24,630 Township Cost for one brining (includes .12/gallon application rate) 60,000 gallons total

The estimates and illustrations are theoretical to help each township in their budget process. You will be billed based on the actual gallons used plus the application rate.

Thank you for your participation in the 2024 OCRC brining programs.

Sincerely,

Mark Timmer
Managing Director

OCEANA COUNTY ROAD COMMISSION

Office (231) 873-4226 P.O. Box 112 Shop (231) 873-3717
Fax (231) 873-7123 Hart, Michigan 49420
www.oceanacrc.org
clerk@oceanacrc.org

2024 Brine Program Contract

between PENTWATER **Township & the Oceana County Road Commission.**
Enter Township Name

Brine application will be scheduled on a first come basis, and may be changed at the Road Commissions discretion due to weather or other scheduling conflicts. Please turn this form in as soon as a decision is made so that the Road Commission may begin planning and scheduling as soon as possible. *Please **check** your choice of Michigan Chloride or Great Lakes Chloride below and **sign and return**.*

☐ **MICHIGAN CHLORIDE SALES LLC – Two brinings per season @ $0.225 Per Gallon**

19-21% Calcium Chloride application rate of 2,500 gallons per mile and requiring up to 2 brining's per season. This is a Contract for services and materials. You will be billed for half the cost of the actual gallons used plus the application rate. Invoices will be sent upon completion of each brining.

☐ **One Brining** **OR** ☐ **Two Brining's**

(Township Supervisor signature)	(2nd Authorized signature)
(Print name)	(Print name)
(date)	(date)

OR

☐ **GREAT LAKES CHLORIDE – One brining per Season @ $0.4105 Per Gallon**

38% Calcium Chloride application rate of 2,000 gallons per mile and one brining per season. This is a Contract for services and materials. You will be billed for half the cost of the actual gallons used plus the application rate. Invoices will be sent upon completion of each brining.

(Township Supervisor signature)	(2nd Authorized signature)
(Print name)	(Print name)
(date)	(date)

THANK YOU!

One Pass: [redacted]

Two Passes: [redacted]

CL Miles: 9.92

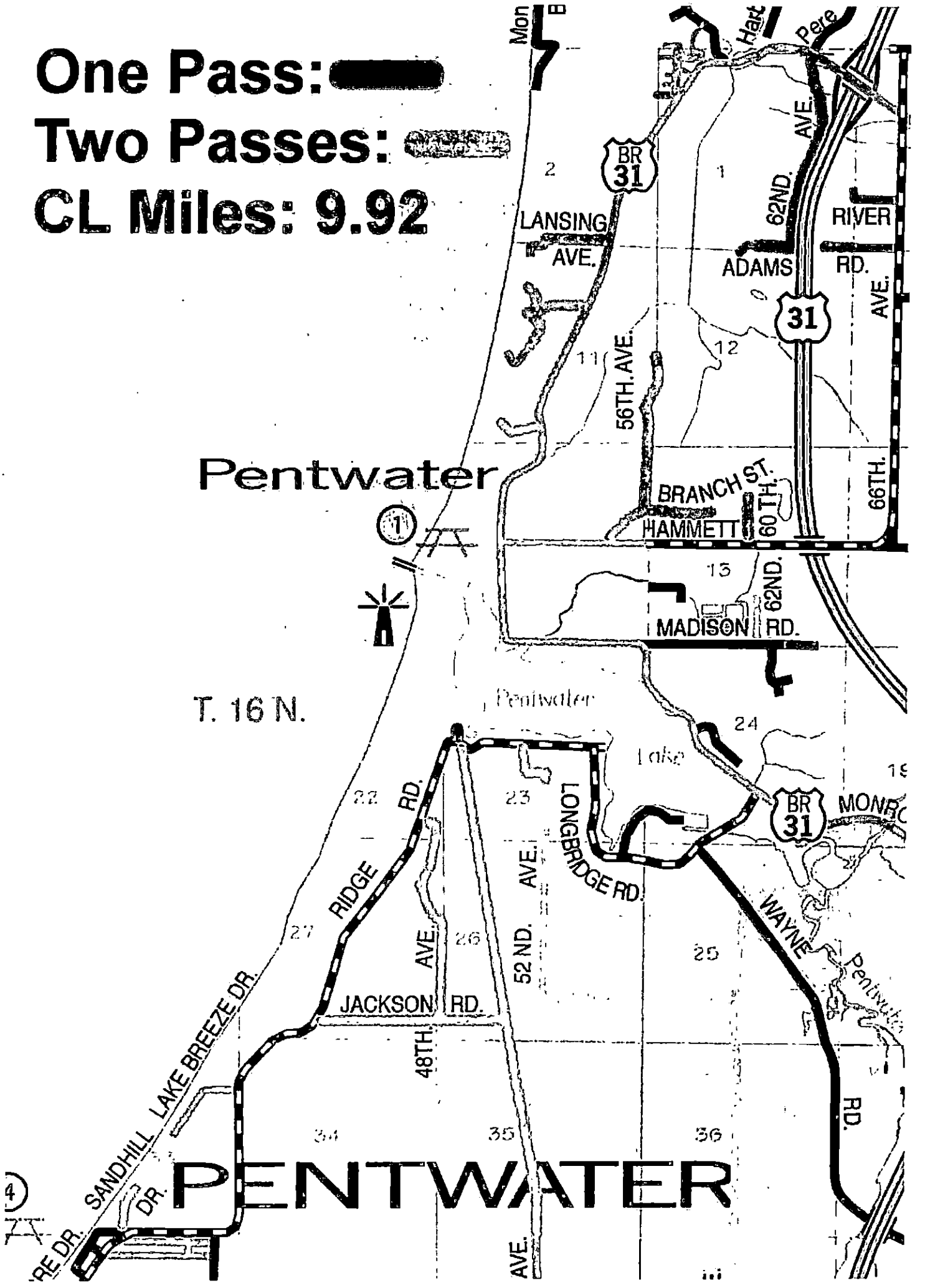

Oceana County Road Commission Brine Log

Twp	Road Name	From	To	Pass	Width 1	Width 2	Width 3	Width Avg	Length	Feet	CL Miles
Pentwater	Adams Rd	Twp Line	End	2	16.6'	16.0'	16.3'	16.3'	835'	835'	0.16
Pentwater	Pentwater Blvd	BR31	Broadway Rd	2	14.6'	15.3'	15.0'	15.0'	1,490'	1,490'	0.28
Pentwater	Ritter Rd	Pentwtr Blvd	Midland Rd	2	14.6'	14.0'	13.6'	14.1'	385'	385'	0.07
Pentwater	Midland Rd	Ritter Rd	Broadway Rd	2	14.0'	15.6'	14.6'	14.7'	280'	280'	0.05
Pentwater	Bone Rd	BR31	End	1	14.0'	12.0'	12.2'	12.7'	615'	308'	0.06
Pentwater	Lansing Rd	BR31	End	2	21.5'	16.2'	14.0'	17.2'	2,680'	2,680'	0.51
Pentwater	Kenneys Rd	BR31	End	2	16.0'	14.2'	12.0'	14.1'	4,850'	4,850'	0.92
Pentwater	Sylvan Rd	BR31	End	2	20.0'	16.9'	17.8'	18.2'	1,320'	1,320'	0.25
Pentwater	56th Ave	Hammett Rd	End	2	20.0'	16.0'	12.6'	16.2'	4,500'	4,500'	0.85
Pentwater	Branch Rd	56th Ave	End	2	13.9'	13.9'	13.9'	13.9'	1,125'	1,125'	0.21
Pentwater	60th Ave	Hammett Rd	End	2	16.0'	15.0'	14.6'	15.2'	1,150'	1,150'	0.22
Pentwater	Orange St	Longbridge Rd	End	1	12.6'	12.0'	11.0'	11.9'	900'	450'	0.09
Pentwater	52nd Ave	Longbridge Rd	Second Curve	2	14.0'	15.0'	12.0'	13.7'	1,150'	1,150'	0.22
Pentwater	Railroad Ave	Twp Line	Longbridge Rd	2	13.6'	15.0'	12.6'	13.7'	13,350'	13,350'	2.53
Pentwater	Jackson Rd	Ridge Rd	Railroad Ave	2	14.0'	13.0'	12.3'	13.1'	5,050'	5,050'	0.96
Pentwater	48th Ave	Jackson Rd	Ridge Rd	2	20.3'	21.0'	22.0'	21.1'	5,825'	5,825'	1.10
Pentwater	62nd Ave	S Pere Mq Hwy	End	2	22.0'	22.0'	22.0'	22.0'	6,270'	6,270'	1.19
Pentwater	Sandhill Dr	Ridge Rd	End	2	19.0'	16.6'	17.6'	17.7'	1,375'	1,375'	0.26
Pentwater								**Total**	**53,150'**	**52,393'**	**9.92**

NTB (P)

Invoice

Household Hazardous Waste Committee
655 N Scottville Rd
Scottville, MI 49454

Date	Invoice #
2/13/2024	131

Bill To
Pentwater Twp.

Terms
June 30th

Item	Description	Quantity	Rate	Amount
Pentwater Township	Pentwater Township - Household Hazardous Waste Collection Services		500.00	500.00

Checks payable to Mason-Lake Conservation District

Total $500.00

Phone #	Web Site
(231) 757-3707	www.mason-lakeConservation.org

Household Hazardous Waste Disposal Program
Mason-Lake Conservation District
655 N. Scottville Rd.
Scottville, MI 49454
(231) 757-3707 Ext. 5.

February 12, 2024

Maureen Murphy
PO Box 512
Pentwater, MI 49449

Dear Pentwater Township Board,

On behalf of the three-county Household Hazardous Waste (HHW) Committee and your local Conservation District, we are writing to request your support for the 2024 HHW and Clean-Sweep collection event scheduled for Saturday, August 17th.

Last year's collection was a tremendous success, resulting in the safe disposal of nearly 90,000 pounds of material across Manistee, Mason, and Oceana Counties. The total cost for this one-day event was nearly $70,000 and with support from the community, we were able to cover these expenses.

The HHW collection has been a crucial service for our community. The demand remains steady and expenses continue to increase, with costs averaging $130 per car. While the industry's disposal costs are on the rise, our allocation request from municipalities **will remain the same as in recent years**. Data for villages/cities have been separated from Townships to avoid duplicate billing.

Requested amount from Pentwater Township:

$500.00

If it is possible to round up to the nearest $25 amount or greater, we would greatly appreciate any additional support!

For residents dropping off materials on collection day, the committee is continuing with the suggested donation of $15 to help cover the increasing costs of disposal.

Enclosed, you will find two contract agreements. Please retain one for your records and sign and return the other with a check made payable to "Mason-Lake Conservation District" (as fiduciary for the Mason, Manistee & Oceana HHW Program). **Contracts and payments are requested no later than June 30th.**

Should you wish to discuss the program further, we are happy to attend a board/council meeting at your convenience or provide past data on the program. We extend our heartfelt appreciation for your ongoing support of our program and the protection of our precious water resources.

Very Sincerely,

Household Hazardous Waste Committee

Frequently Asked Questions

What is this program all about?

The goal is to provide a way for residents to safely and easily dispose of hazardous materials so that they do not end up in our lakes, streams, groundwater or public water supplies. This often includes chemicals and heavy metals found in electronics or batteries.

What is the average cost per car?

On average, each car brings $130 worth of hazardous materials for disposal. Our request for funds is only $0.40 per person from the township, and a suggested $15 donation at the site from program participants.

How much waste is collected each year?

From 2016-2023, the committee has collected and safely disposed more than **370 tons** in the 3-county area. That breaks down to an average of 92,486 pounds each year.

Why can't it just get thrown away?

Many of these hazardous materials are not allowable in municipal waste stream because they cannot be safely disposed of and could end up in the environment. For example, we most commonly collect pesticides, fertilizers, oils and other chemicals. Pesticides can acutely impact human health when they spill and leach through the soil and into the groundwater aquifers. These water resources are the source of drinking water for many people's wells in our rural communities. Nitrogen pollution in groundwater (from fertilizers) can cause chronic effects in infants and the elderly by affecting the blood's ability to carry oxygen. In addition to these more immediate threats, pesticides and fertilizers can impact our local watersheds, causing harmful algae blooms and/or fish and invertebrate die-offs. Items such as pesticides, fertilizers, motor oil and heavy metals found in electronics and batteries can be safely reused, recycled, or disposed of through our program, helping to keep our drinking water clean and rivers healthy.

Why does this program have two names?

This collection is often referred to as the HHW/Clean Sweep Program. It was founded upon the need for safe pesticide disposal in the 3-county area. The Clean-Sweep program was operated for many years before it inspired the collection and disposal of Household Hazardous Waste and the formation of the HHW committee in 2006.

For more information, please visit our website at: mason-lakeconservation.org

2024
CONTRACT AND AGREEMENT FOR SERVICES
Pentwater Township
WITH MANISTEE, MASON, AND OCEANA CONSERVATION DISTRICTS

Pentwater Township and the Manistee, Mason and Oceana Conservation Districts desire to act cooperatively to provide the proper disposal of household hazardous waste for residents of Pentwater Township and Mason County. Therefore, Pentwater Township contracts with Manistee, Mason and Oceana Conservation Districts for collection and disposal of household hazardous waste for the amount of $_____. This service agreement will promote the public health, safety, and welfare of the Township and County residents.

Date:_____ by: _____
Pentwater Township Representative

Date: 2/01/24 by: Renee Mallison
Manistee Conservation District Representative

Date: 2/01/24 by: Danielle McDaniel
Mason-Lake Conservation District Representative

Date: 2/01/24 by: S Knoll
Oceana Conservation District Representative

Retain this copy for your records

Oceana County				
TOWNSHIPS/VILLAGES/CITIES	AMOUNT REQUESTED	AMOUNT RECEIVED	# of Cars	# of Households
Benona Township	$570.00	$500.00	30	32
Claybanks Township	$342.00	$350.00	9	9
Colfax Township	$178.40		1	1
Crystal Township	$272.40		1	1
Elbridge Township	$399.60	$400.00	7	7
Ferry Township	$508.40	$100.00	3	3
Golden Township	$664.00	$664.00	39	43
Grant Township	$997.60	$450.00	11	13
Greenwood Township	$462.40	$300.00	4	4
Hart Township	$811.20	$811.20	20	23
Leavitt Township	$265.60		3	3
Newfield Township	$685.60	$100.00	12	16
Otto Township	$343.20		2	2
Pentwater Township	$500.00	$500.00	30	33
Shelby Township	$698.00	$550.00	19	20
Weare Township	$489.60	$100.00	12	12
City of Hart	$850.40	$850.40	16	20
Village of Hesperia	$246.00		0	0
Village of New Era	$178.40	$250.00	12	13
Village of Pentwater	$500.00	$500.00	25	33
Village of Rothbury	$184.80	$185.00	0	0
Village of Shelby	$785.60	$550.00	10	15
Village of Walkerville	$98.80		0	0
Oceana County	$6,000.00	$6,000.00		
TOTAL	**$17,032.00**	**$13,160.60**	266	303

Collection Items	Oceana County (lbs)
Household Haz. Waste	6,146
Rx & Sharps	348
Controlled substances	6
Pesticides and other chemicals	4,879
Oil / Auto fluids	3,583
Auto Batteries	1,007
Household Batteries	677
Electronics/Appliances	8,170
Oil Based Paints	1,772
Total Pounds	**26,588**

2024
CONTRACT AND AGREEMENT FOR SERVICES
Pentwater Township AND MANISTEE, MASON, AND OCEANA CONSERVATION DISTRICTS

Pentwater Township and the Manistee, Mason and Oceana Conservation Districts desire to act cooperatively to provide the proper disposal of household hazardous waste for residents of Pentwater Township and Mason County. Therefore, Pentwater Township contracts with Manistee, Mason and Oceana Conservation Districts for collection and disposal of household hazardous waste for the amount of $_____. This service agreement will promote the public health, safety, and welfare of the Township and County residents.

Date:_____ by: _____
Pentwater Township Representative

Date: 2/01/24 by: Renee Mallison
Manistee Conservation District Representative

Date: 2/01/24 by: Danielle McDaniel
Mason-Lake Conservation District Representative

Date: 2/01/24 by: S Knoll
Oceana Conservation District Representative

Please sign and return to Mason-Lake Conservation District with your check

NTB Q

Memorandum

To: Pentwater Township Board of Trustees

From: Keith Edwards, Deputy Supervisor

Date: March 8, 2024

Subject: Request for Review and Approval
Proposal from Fleis & Vandenbrink for preparation of a Project Plan for CWSRF Submission for Sanitary Sewer System Upgrades

---

In September of 2023, Township Engineers, Fleis & Vandenbrink (F&V) finalized their Evaluation Report of the Township Sanitary Sewer Systems. Within that report are approximately $450,000 in upgrades necessary to keep these systems functioning properly.

In November of 2023, F&V Assisted the Township with an Intent-to-Apply (ITA) for project funding through the State's Department of Environment, Great Lakes and Energy (EGLE) for full or partial funding under the Clean Water State Revolving Fund (CWSRF).

The next step in this process is to is to prepare a Project Plan for submittal to EGLE by May 1, 2024 for potential project construction in 2025.Thus, in order to find out if Pentwater Township would qualify for such funding, the Township must submit a Project Plan. Please see the attached proposal from F&V for additional information regarding this program.

Submission of the Project Plan does not obligate Pentwater Township to access the funding available through CWSRF, but we do not know if we will qualify, or when we might be awarded such project funding if we do not apply. Project Plans are effective for up to 5 years, so even if we do not qualify in this round of funding, the project plan can be reconsidered or modified for further consideration.

Township Supervisor, Lynne Cavazos and I have asked F&V to provide us a proposal for preparing the Project Plan. The proposal is attached to this memorandum for your consideration. The total cost for F&V to prepare the project plan as shown in the proposal is $ 15,000.00. Since the proposal is greater than the $5,000.00 limit allowed for spending without Township Board approval, Staff seeks the Township Board's approval at this time in order to meet the requirements for a public meeting and the deadline for submission on or before May 1, 2024.

FLEIS&VANDENBRINK
DESIGN. BUILD. OPERATE.

March 8, 2024

Via Email: zoningadministrator@pentwatertownshipmi.gov

Keith Edwards, Zoning Administrator
Pentwater Township
500 North Hancock Street
PO Box 512
Pentwater, MI 49449

RE: Proposal for Professional Engineering Services – Clean Water State Revolving Fund (CWSRF) Project Plan for FY 2025

Dear Keith:

We appreciate the opportunity to assist Pentwater Township with improvements to your Wastewater Collection and Treatment Facilities. As you are aware, Fleis & VandenBrink (F&V) assisted the Township in submitting an Intent-to-Apply (ITA) for the Clean Water State Revolving Fund (CWSRF) in November 2023. A copy of the ITA is attached to this proposal for reference.

The next step is the preparation and submittal of a Project Plan which is due May 1, 2024. We offer this proposal for the preparation of the Project Plan.

Project Understanding

We understand the Township wants to apply for CWSRF funding to make improvements to its wastewater collection and treatment systems. The CWSRF program provides government subsidized low-interest loans with a potential for a grant to assist communities in completing improvements to its wastewater infrastructure. The proposed improvements to be funded in this Project Plan are detailed in the study prepared by F&V titled *Sanitary Sewer System Evaluation* dated September 2023 and generally include:

- Installation of permanent generators at the Boathouse and Lakeview lift stations.
- Install alarm callout systems at all three lift stations.
- Creation of an O&M Manual and Discharge Management Plan.
- Replace Apache Hills lift station wet well.
- Install surge protector at the Apache Hills lift station.
- Improve Apache Hills lift station conduits and junction boxes bringing them into current code compliance.
- Install pump motor over temperature and seal failure monitors on the Lakeview lift station.
- Replace all lift station pump chains.
- Replace floats at each STEP system.
- Tie Apache Hills lift station generator into the alarm system.
- Install radar transducer at each of the three lift stations.
- Regrade around the Boathouse lift station to achieve drainage away from the lift station.
- Clean and televise all gravity flow sanitary sewer.

2960 Lucerne Drive SE
Grand Rapids, MI 49546
P: 616.977.1000
F: 616.977.1005
www.fveng.com

Its worthy to note the above list of improvements was developed from Table 1 - Recommendations from the above identified evaluation study. The items in Table 1 not included in the above bullet pointed list for inclusion in the Project Plan are maintenance items already completed or repairs currently being designed as part of the Septic System Repairs project with plans to construct the improvements in the summer of 2024.

If funding is awarded, the loan/grant can cover the planning, design, and construction of the project including the fee for the preparation of the Project Plan.

To proceed with a CWSRF application for FY2025 funding, a Project Plan that justifies the proposed improvements must be completed and submitted to the Michigan Department of Environment, Great Lakes, and Energy (EGLE) by May 1, 2024. The Project Plan is the vehicle used to compete for funding with other needed wastewater improvement projects throughout the State.

After the Project Plan is submitted, projects are scored and ranked on EGLE's Project Priority List (PPL). The PPL ranks projects on factors such as public health, water quality, improving infrastructure and disadvantaged community status. A Project Plan does not guarantee a loan or grant funding offer from the State nor does it commit the Township to accept an offer should the Township receive one.

Scope of Service

The major sections that the Project plan must include are Project Background, Analysis of Alternatives, Principal Alternatives, Environmental Evaluation, Mitigation Measures, and public participation. We anticipate the Township will manage the public notices (required for the CWSRF public meeting) and assist with the written summary of public comments on the draft Project Plan. As we have done with other projects, we will work closely with the Township administration to share the workload in preparing the required documents, exhibits, and tables.

Fee Budget

We propose to complete the scope of work outlined above for a **lump sum fee of $15,000**.

Should the Township be awarded funding, a separate proposal will be provided to continue with Part I, II, and III of the CWSRF application. Please note the fee and scope of services above have assumed a funding offer from the state would not use new federal funds thereby making this a "non-equivalency" project. Therefore, the full environmental evaluation (Archeological, SHPO, THPO, etc.) will not be required. Should the project be funded, and those funds include new federal funds making this an "equivalency" project, F&V can provide Federal Crosscutters requirements as an additional fee later.

Schedule

We are prepared to begin this work immediately upon authorization and expect to have a draft project plan completed and ready for public display by March 22, 2024. A public meeting is required, and we suggest the Township consider meeting this requirement at their scheduled Board meeting on April 10, 2024. The draft Project Plan must be on display for 15 days prior to the public meeting. The notice of public meeting must be advertised at least 15 days prior to the hearing. Following the public meeting, the Project Plan will be finalized and submitted to EGLE by May 1, 2024. If funding is awarded it would be announced in late 2024 with construction anticipated to begin in 2025.

We appreciate the opportunity to continue to provide services to the Township. If you have any questions, please contact me at (616) 540-3617 or sbishop@fveng.com.

FLEIS & VANDENBRINK

Steven M. Bishop, P.E.
Project Manager

Don DeVries, P.E.
Group Manager

WORK AUTHORIZATION

Fleis & VandenBrink Engineering, Inc. (F&V) is hereby authorized to perform the services stated within this proposal under the existing Professional Services Agreement with F&V executed on March 16, 2023.

Pentwater Township

_____ _____

Authorized Representative Date

EGLE

MICHIGAN DEPARTMENT OF ENVIRONMENT, GREAT LAKES, AND ENERGY

Finance Division

FISCAL YEAR 2025 INTENT TO APPLY FORM

This form must be submitted by all applicants seeking funding from the State Revolving Fund programs in fiscal year (FY) 2025 (October 1, 2024 – September 30, 2025). This includes the Drinking Water State Revolving Fund (DWSRF), Clean Water State Revolving Fund (CWSRF), and Strategic Water Quality Initiatives Fund (SWQIF). The Intent to Apply form may be submitted at any time but is due on or before November 1, 2023. Applicants must complete a separate form for CWSRF and DWSRF, if applying for both.

General Information

Date Submitted: 10/31/2023 ITA Tracking Number: 1031-1800

Is this project a carry-over from a plan submitted within the previous five fiscal years? ☐ Yes ☑ No

Project Name: Pentwater Township - Sanitary System Improvements

Project Need: The sewer system within the Township contains aging infrastructure that is beyond its useful life. The dosing chamber at the Village's septic system does not properly dose the drainfield to its design intent. The Apache Hills lift station is near failure and due to the proximity to Pentwater Lake could have a large public health impact. Residential grinder stations also surround the lake and the failure of these aging components impose a public health risk.

FY25 Project Scope: Municipal dosing tank re-piping, lift station improvements, grinder station improvements.

Municipal Applicant Legal Name*: Pentwater Township County*: Oceana

Applicant Contact Person Name*: Lynne Cavazos Title*: Township Supervisor

Phone Number*: (231) 869-6231 Email*: supervisor@pentwatertownshipmi.gov

Alternative Email:

Consulting Engineer Name: Danell Smith Firm: Fleis & VandenBrink Engineering

Phone Number: (616) 965-8783 Email: dsmith@fveng.com

Project Information

Project funding source*:
☑ Clean Water State Revolving Fund
☐ Drinking Water State Revolving Fund
☐ Strategic Water Quality Initiatives Fund

Treatment Facility Name (if applicable): Apache Hills & Hilltop Treatment Systems

Will the proposed project result in a new or increased discharge requiring NPDES permit issuance?
☐ Yes ☑ No ☐ Unknown

Are you planning on constructing a new well? ☐ Yes ☐ No

Proposed Construction Start Date: 03/2025

Estimated Total Project Cost: 500,000

FY 2025 Estimated Total Project Cost (FY 2025 loan amount): 50,000

FY 2026-2029 Estimated Total Project Cost:

FY 2025 Lead Service Line Replacement Cost:

FY 2025 Emerging Contaminant Cost:

Identify additional funding sources being used on the project? (check all that apply)
☐ MDOT
☐ MEDC
☐ USDA
☐ Other:

Identify any completed project-related planning documents (check all that apply):
☑ Capital Improvements Plan
☐ Asset Management Plan
☐ Preliminary Engineering Report
☐ Environmental Report
☐ Project Plan
☐ Infiltration & Inflow Study
☑ Sanitary Sewer Evaluation Study
☐ NASSCO Report
☐ Watershed Management Plan
☐ Master Plan
☐ Reliability Study
☐ DSMI
☐ Other:

Additional Information

Overburdened Community Status Determination Worksheets cannot be completed until early 2024. Once the form is available, it will be posted to the Overburdened Community website and information will be sent to all applicants. Note that a new form is required every year for all applicants.

Please note: Applicants for CWSRF funding may be required to use a Qualifications-based Selection (QBS) process to select and hire an architectural and engineering firm for those costs to be eligible for CWSRF funding. This includes planning, design engineering and construction engineering services. Your assigned project manager will discuss these requirements in more detail.

After your submission is received, you will be contacted by an assigned EGLE Water Infrastructure Funding and Financing Section (WIFFS) project manager within the next couple weeks to discuss the next steps. The project manager can help to identify project funding opportunities, challenges, and project planning guidance to assist the efforts of the applicant and their consulting engineer.

For questions, please visit our website at Michigan.gov/CWSRF and Michigan.gov/DWSRF, or contact WIFFS at 517-284-5433 or EGLE-WIFFS@Michigan.gov. You may also contact the SRF Project Manager located in your EGLE District Office

If you need this information in an alternate format, contact EGLE-Accessibility@Michigan.gov or call 800-662-9278.

EGLE does not discriminate on the basis of race, sex, religion, age, national origin, color, marital status, disability, political beliefs, height, weight, genetic information, or sexual orientation in the administration of any of its programs or activities, and prohibits intimidation and retaliation, as required by applicable laws and regulations. Questions or concerns should be directed to the Nondiscrimination Compliance Coordinator at EGLE-NondiscriminationCC@Michigan.gov or 517-249-0906.

This form and its contents are subject to the Freedom of Information Act and may be released to the public.

NB(R)

Lynne Cavazos

From: Mark Timmer <mtimmer@oceanacrc.org>
Sent: Tuesday, March 5, 2024 9:07 AM
To: Lynne Cavazos
Subject: Re: PROPSAL FOR SHORT TERM FIX - FISHING PLATFORM
Attachments: Proposal - Longbridge Road Pedestrian Bridge Repairs.pdf

Hi Lynne,

Attached is the bid packet and design that we are accepting bids on and opening March 12th at 2:30 pm.

In talking with Robert Lothschutz we are comfortable with you authorizing a not to exceed cost of $12,000, as I understand you would like to do this at your upcoming meeting. We are projecting the bid is less than this.

If the bids are higher we would certainly discuss what direction to proceed.

Thanks,

Mark

Mark Timmer
Managing Director

Oceana County Road Commission
3501 W. Polk Rd
P.O. Box 112
Hart, MI 49420

Phone 231-873-4226
Fax 231-873-7123

From: Lynne Cavazos <supervisor@pentwatertownshipmi.gov>
Sent: Monday, March 4, 2024 3:29 PM
To: Mark Timmer <mtimmer@oceanacrc.org>
Cc: Lynne Cavazos <supervisor@pentwatertownshipmi.gov>
Subject: PROPSAL FOR SHORT TERM FIX - FISHING PLATFORM

Hi Mark,
Could you please send me something in writing that I can present to the Pentwater Township Board for approval of the funding for the short term fix of the Longbridge Fishing Platform?
I did have board approval to have you request a bid but I do not think I asked for approval for an amount. If you could give me an estimate – for example "up to" a certain amount – I would like to put it on next week's Board Meeting Agenda.

Thanks so much - Lynne

Lynne Cavazos
Pentwater Township Supervisor
Phone: 231-869-6231, Ext. 222
supervisor@pentwatertownshipmi.gov

PROPOSAL AND SPECIFICATIONS

FOR

Structural Steel Repairs

Longbridge Road Fishing Platform over Pentwater River

PENTWATER TOWNSHIP

February 20, 2024

OCEANA COUNTY ROAD COMMISSION

Office (231) 873-4226
FAX (231) 873-7123

P.O. Box 112
Hart, Michigan 49420
www.oceanacrc.org (website)
sgriffin@oceanacrc.org (email address)

Shop (231) 873-3717

PROPOSAL AND BID

Date: _____

Board of County Road Commissioners of Oceana County
3501 W Polk Rd, Hart, MI 49420

Sirs and Madam:

The undersigned has examined the plans, specifications, and location of the work described herein and is fully informed as to the nature of the work and the conditions relating to its performance and understands that the quantities shown in the estimate are approximate only and are subject to either increase or decrease; and hereby proposes to furnish all necessary machinery, tools, apparatus and other means of doing the work, do all the work, furnish all the materials except as otherwise specified herein, and, for the unit prices named in the accompanying unit price schedule, to complete work in strict accordance with the plans and specifications therefore.

The undersigned further proposes to do such extra work as may be ordered by you, prices for that are not included in the itemized bid, compensation therefore to be made on the basis agreed upon before such extra work is begun.

The undersigned agrees to complete all items of work on or before July 31, 2024. The schedule for liquidated damages is located in the general specifications.

The contractor shall submit a progress schedule subject to approval of the Engineer prior to the award of the contract.

THE CONTRACT

The Contract Documents consist of the bid documents, this Agreement, Conditions of the Contract (General Supplementary, Special and other Conditions), Drawings, Specifications, Addenda issued prior to execution of this Agreement, other documents listed in this Agreement and Modifications issued after execution of this Agreement; these form the Contract, and are as fully a part of the Contract as if attached to this Agreement or repeated herein. The Contract represents the entire and integrated agreement between the parties hereto and supersedes prior negation, representations or agreements, either written or oral. If anything in the other Contract Documents is inconsistent with this Agreement, this Agreement will govern.

PROJECT: Structural steel repairs on Longbridge Road Fishing Platform (east side of Longbridge Road vehicle bridge) over Pentwater River, Pentwater Township, Oceana County.

ITEMIZED UNIT PRICE SCHEDULE

ITEM OF WORK	QUANTITY	UNIT	UNIT PRICE	TOTAL
Structural Steel Repairs*	1	LSUM		

*Note: The item "Structural Steel Repairs" includes all materials, equipment, and labor required to install the steel bearing headers as shown on the plan detail. This item includes the H-1 grout to be placed under the proposed bearing header.

TOTAL: $_____

The undersigned bidder agrees that the following is a complete and accurate list of all sub-contractors to be utilized if awarded this contract and any change from this list will be permitted only with the consent of the Board of County Road Commissioners of Oceana County.
List name of each sub-contractor and brief description of work to be done.

_____

_____

_____

_____

_____

_____

I hereby state that all of the information I have provided is true, accurate and complete. I hereby state that I have the authority to submit this bid, which will become a binding contract if accepted by the Board of County Road Commissioners of Oceana County. I hereby state that I have not communicated with nor otherwise colluded with any other bidder, nor have I made any agreement with nor offered or accepted anything of value from an official or employee of the Board of County Road Commissioners of Oceana County that would tend to destroy or hinder free competition.

In case the bidder is a co-partnership, each member must sign this proposal.

In case the bidder is a Corporation, this proposal must be executed by its duly authorized officials in accordance with its articles of incorporation and a certified copy of such articles must be attached hereto.

I hereby state that I have read, understand and agree to be bound by all the terms of this bid document.

SIGNATURE: _____ NAME: _____
(Type or Print)

TITLE: _____ DATE: _____

FIRM NAME: _____ PHONE: _____

ADDRESS: _____
(Street Address) (City) (State) (Zip)

FOR COUNTY USE ONLY – DO NOT WRITE BELOW

ACCEPTED BY: BOARD OF COUNTY ROAD COMMISSIONERS OF THE COUNTY OF OCEANA, MICHIGAN

_____
William Myers, Chairman

_____
Lloyd Gowell, Vice-Chairman

_____
Cathy Forbes, Member

_____
David Spitler, Member

_____
Denis Koch, Member

_____
Date

STANDARD SPECIFICATIONS

The work covered by the plans and specifications will be done in accordance with the 2020 Michigan Department of Transportation Standard Specifications for Construction, except as qualified in supplemental specifications and special conditions of the Oceana County Road Commission or as agreed to in writing at the time of the award of the contract. Nothing herein will be construed to create any obligation or duty on the part of the Board of County Road Commissioners of Oceana County, including obligations or duties which may be expressed or implied in the Standard Specifications for Construction of the Michigan Department of Transportation, unless specifically set forth in the contract documents.

RESPONSIBILITIES OF CONTRACTOR

A. Responsibility for and Supervision of Construction: Unless otherwise stated herein, Contractor will be solely responsible for all construction under this Contract, including the methods, techniques, sequences, procedures, and means, and for coordination of all work. Contractor will supervise and direct the work to the best of Contractor's ability, and give it all attention necessary for such proper supervision and direction. Contractor will notify the Road Commission of any extras as soon as possible to allow for approval or design changes.

B. Discipline and Employment: Contractor will maintain at all times strict discipline among Contractor's employees, and Contractor agrees not to employ for work on the project any person unfit for work or without sufficient skill to perform the job for which he or she was employed. Neither the Contractor nor his/her Subcontractors shall discriminate against any employee or applicant for employment, to be employed in the performance of this Contract, with respect his/her hire, tenure, terms, conditions or privileges of employment, of any matter directly or indirectly related to employment because of his/her race, color, religion, national origin, or ancestry. Breach of this covenant may be regarded as a material breach of this Contract.

C. Furnishing of Labor, Materials, etc: Unless otherwise stated herein, Contractor will provide and pay for all labor, materials, and equipment, including tools, construction equipment, and machinery, utilities, including water, transportation, and all other facilities and services necessary for the proper completion of work on the project in accordance with the Contract Documents.

D. Payment of Taxes: Contractor will pay all taxes required by law in connection with work on the project in accordance with this agreement including sales, use, and similar taxes. The Contractor is not liable for sales or use tax on installation of materials that have been purchased by the Oceana County Road Commission.

E. Licenses and Permits: Contractor will abide by all previously acquired permits included in this agreement and will secure all licenses and additional permits necessary for proper completion of the work, paying the fees for such licenses and permits.

F. Compliance with Laws and Regulations: Contractor will comply with all laws and ordinances, and the rules, regulations or orders of all public authorities relating to the performance of the work under and pursuant to this Agreement including, but not limited to, the Occupational Safety and Health Act of 1970, the Michigan Occupational Safety and Health Act, and the rules and regulations of the Michigan Construction Safety Commission.

G. Responsibility for Negligence of Employees and Subcontractors: Contractor assumes full responsibility for acts, negligence or omissions of all of Contractor's employees on the project, for those of Contractor's subcontractors and their employees, and for those of all other persons doing work under a contract with Contractor.

H. Responsibility for Safety: Unless otherwise stated herein, at Contractor's expense, Contractor will take all necessary precautions (including, without limitation, the furnishing of traffic control, barricades, traffic control devices, flaggers, warning lights, signs, warning signs, safety channels, channelization devices, guards, fences, walks, flags, cables and lights) for the safety of, and the prevention of injury, loss and damage to, persons and property (including, without limitation, in the term persons, members of the public, employees, Contractor's subcontractors and their respective employees, other contractors, their subcontractors and respective employees) on, about or adjacent to the location where the work is being performed, and will comply with all applicable provisions of safety rules, ordinances, codes, regulations, and orders of duly-constituted public authorities including, but not limited to, the Michigan Manual on Uniform Traffic Control Devices.

I. Responsibility of Subcontractors: The Contractor will require any subcontractor hired by the Contractor for the purpose of performing any of the work described by the Contract documents to be bound by all of the terms and conditions of the Contract documents and to perform the work in accordance with the Contract documents. Each and every condition of the Contract documents, including without limitation, the RESPONSIBILITIES OF THE CONTRACTOR, will be made a condition of each subcontract entered into by the Contractor in conjunction with the performance of the work.

INDEMNIFICATION

To the fullest extent permitted by law, the Contractor will indemnify, defend, and hold harmless The Board of County Road Commissioners of Oceana County, its officers, employees, representatives and agents from and against any and all claims, damages, demands, payments, suits, actions, recoveries, judgments, losses and expenses, including attorney fees, interest, and court costs, which are made, brought or recovered against the Board of County Road Commissioners of Oceana County, arising out of or resulting from performance of the Contractor's work under this Contract, provided that such claims, damages, losses, demands, payments, suits, actions, recoveries, judgments and/or expenses are attributable to bodily injury, sickness, disease or death, or to injury to or destruction of tangible property (other than the work itself) including loss of use resulting therefrom, but only if caused in whole or in part, by the act,

omissions, fault, negligence or breach of the conditions of this Contract by negligent acts or omissions of the Contractor, the Contractor's sub-subcontractors, anyone directly or indirectly employed by them or anyone for whose acts they may be liable, regardless of whether or not such claim, damage, loss or expense is caused in part by a party indemnified hereunder. The Contractor will not, however, be obligated to indemnify the Board of County Road Commissioners of Oceana County, for any damage or injuries caused by or resulting from the sole negligence of the Board of County Road Commissioners of Oceana County. Such obligation will not be construed to negate, abridge or otherwise reduce other rights or obligations of indemnity which would otherwise exist as a party or person described in this paragraph.

In claims against any person or entity indemnified under this Agreement by an employee of the Contractor, the Contractor's sub-subcontractors, anyone directly or indirectly employed by them or anyone for whose acts they may be liable, the indemnification obligation under this paragraph will not be limited by a limitation on amount or type of damages, compensation or benefits payable by or for the Contractor or the Contractor's subcontractors under workers' or workmen's compensation acts, disability benefit acts or other employee benefit acts.

INSURANCE

A. Contractor's Insurance: Prior to start of the Contractor's work, the Contractor will procure for the Contractor's work and maintain in force until the completion of the work, workers' compensation insurance, employer's liability insurance, comprehensive general liability insurance and all insurance required of the contract under the contract documents.

   The Board of County Road Commissioners of Oceana County will be named as an additional insured on each of these policies except for worker's compensation.

   The insurance will include contractual liability insurance covering the Contractor's obligations under its agreement of indemnification as set forth herein.

B. Minimum Limits of Liability: The Contractor's comprehensive general and automobile liability insurance as required herein, will be written with limits of liability not less than the following:

   a. Comprehensive general liability including completed operations

      (1) $500,000 each occurrence

   b. Property damage

      (1) $500,000 each occurrence

C. Number of Policies: Comprehensive general liability insurance and other liability insurance may be arranged under a single policy for the full limit required or by

combination of underlying policies with the balance provided by an excess or umbrella liability policy.

D. Cancellation, Renewal or Modification: The Contractor will maintain in effect all insurance coverage required under this Agreement at the Contractor's sole expense and with insurance companies acceptable to the Board of County Road Commissioners of Oceana County.

All insurance policies will contain a provision that the coverage afforded thereunder will not be cancelled or not renewed nor restrictive modifications added at any time after a certificate of insurance required under agreement has been issued and before the work; as defined herein, has been completed, until at least thirty (30) days prior thereto written notice has been given to the Board of County Road Commissioners of Oceana County unless otherwise specifically required in the Contract Documents.

Certificates of insurance or certified copies of policies acceptable to the Board of County Road Commissioners of Oceana County will be filed with the Board of County Road Commissioners of Oceana County prior to the commencement of the Contractor's work.

In the event that the Contractor fails to obtain or maintain any insurance coverage required under this Agreement, the Board of County Road Commissioners of Oceana County may:

1. Purchase such coverage and charge the expense thereof to the Contractor, and

2. Withhold from any payment due or to become due to the Contractor an amount sufficient to protect the Board of County Road Commissioners of Oceana County from such claims, damages, demands, payments, suits, actions, recoveries, judgments, losses and expenses, including attorney fees, interest and court costs, and

3. Terminate this agreement.

Nothing contained in this Agreement, nor the Board of County Road Commissioners of Oceana County's compliance therewith, will relieve the Contractor from its obligations under the Contract to purchase and maintain required insurance or to indemnify the Board of County Road Commissioners of Oceana County.

PROGRESS CLAUSE

The Road Commission anticipates that construction can begin upon contract award, or on the date agreed upon with the Engineer. The successful bidder will be required to submit a Progress Schedule, giving an outline of his proposed order of work and to indicate the dates for completion of the work. This outline, when approved by the Road Commission, will become a part of the contract.

The Contractor will prosecute the work in the order given in the Progress Schedule, with force and equipment adequate to complete the sections within the time limit therein fixed for completion. In case of failure to proceed with the work as rapidly as is provided in the Progress Schedule, or if it appears at any time that such work is not being prosecuted in such a manner as to insure its completion within the time specified, the Road Commission will have the right to require the contractor to furnish and place in operation such additional force and equipment as the Road Commission will deem necessary to bring the work up to the Progress Schedule; and in case of the Contractor's neglect to do so, the Road Commission may place such working force and equipment on the work and charge the Contractor the cost of the labor and such rental and depreciation rates for the plan and equipment as in its judgment is reasonable, and for such time as the plant and equipment are in service.

COORDINATION CLAUSE

The Contractor is reminded of the requirements in subsection 104.08 of the 2020 Standard Specifications for Construction to cooperate with other contractors, utility companies, and public agencies.

FINAL PAYMENT

Final payment will not be made until the contractor will have filed with the Board of County Road Commissioners the consent of the Surety of the payment of the final estimate and satisfactory evidence by affidavit or otherwise that all his indebtedness by reason of the contract has been fully paid or satisfactorily secured. In case such evidence is not furnished, the Road Commission may retain out of any amount due said contractor sums sufficient to cover all lienable claims unpaid.

CONTRACT BONDS

The Successful Bidder will furnish satisfactory performance and lien bonds, each in the amount of not less than one hundred (100) percent of the total contract price. Such bonds will meet the regulations of the Oceana County Road Commission and the requirements specified in the laws of Michigan.

Bonds will not be required for contracts less than $5,000.00.

MDOT PREQUALIFICATION

Contractors bidding on this work must be pre-qualified by the Michigan Department of Transportation to do similar work on State or Federal-aid Secondary projects.

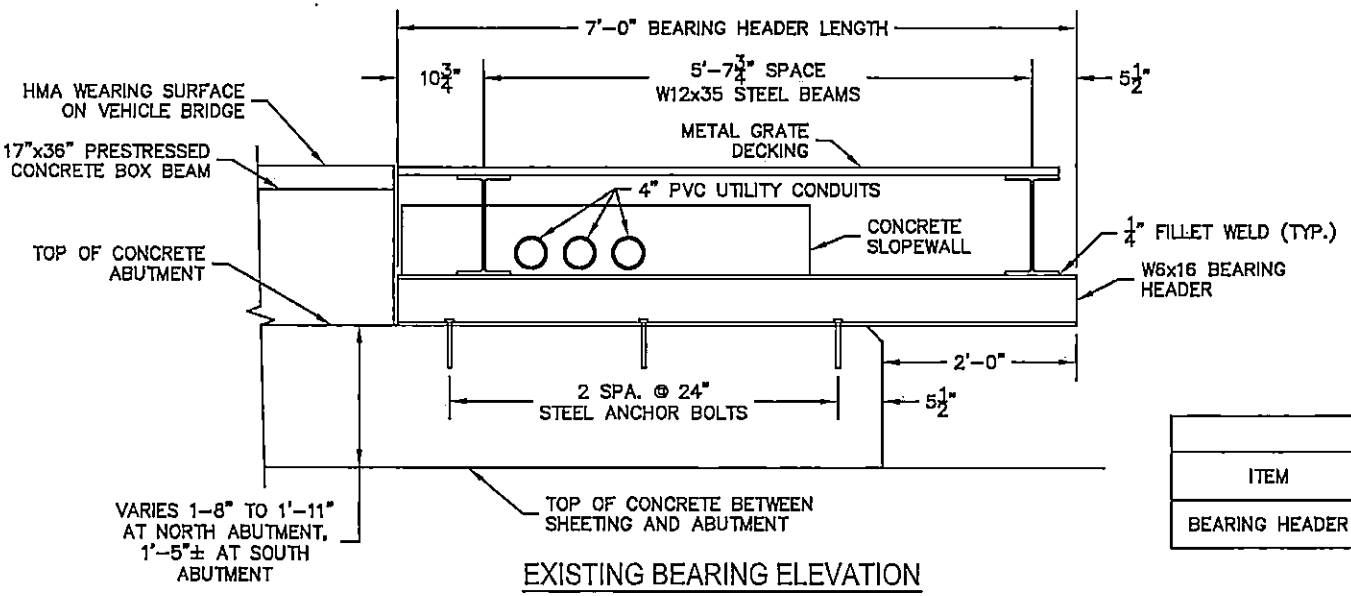

EXISTING BEARING ELEVATION

NOTES:

ALL WORK AND MATERIALS SHALL CONFORM TO THE 2020 MDOT STANDARD SPECIFICATIONS FOR CONSTRUCTION.

USE ASTM A36 STEEL FOR PROPOSED BEARING HEADERS. GALVANIZING IS NOT REQUIRED.

BEFORE INSTALLING PROPOSED BEARING HEADERS, REMOVE DIRT, SCALE, AND LOOSE CONCRETE FROM TOP OF ABUTMENT.

PROPOSED BEARING HEADERS MAY BE CLAMPED TO EXISTING STEEL BEAMS DURING GROUT PLACEMENT.

USE CAUTION TO AVOID DAMAGE TO EXISTING STRUCTURE AND UTILITY CONDUITS. SHIELD CONDUITS IF NECESSARY DURING WELDING.

BILL OF MATERIALS – STEEL						
ITEM	DESCRIPTION	UNIT WEIGHT	UNIT	NUMBER REQUIRED	TOTAL	UNIT
BEARING HEADER	C6x13 – 6'-6"	84.5	LB	2	169	LB

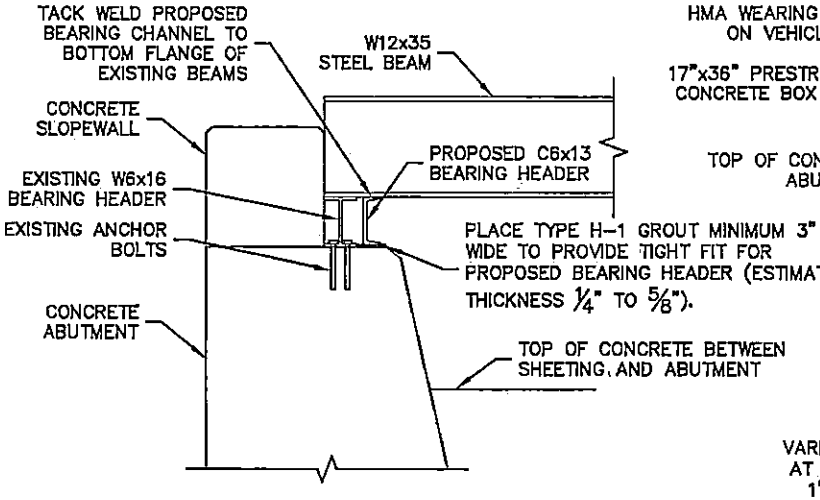

PROPOSED BEARING REPAIR SECTION

APPLIES TO NORTH AND SOUTH END OF EAST BRIDGE
NOTE: ELEMENTS SHOWN GRAY ARE EXISTING

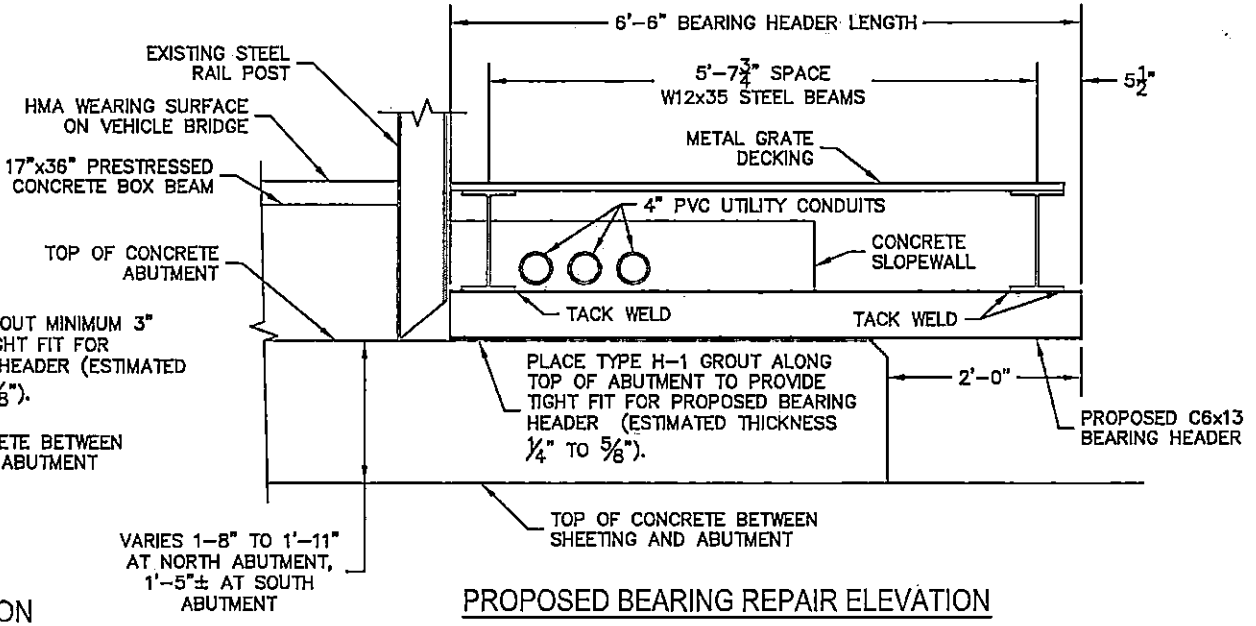

PROPOSED BEARING REPAIR ELEVATION

APPLIES TO NORTH AND SOUTH END OF EAST BRIDGE
NOTE: ELEMENTS SHOWN GRAY ARE EXISTING

BEARING REPAIR DETAILS
LONGBRIDGE ROAD "FISHERMAN'S LANDING"
OVER PENTWATER RIVER

SCECO
SCOTT CIVIL ENGINEERING COMPANY
GRAND RAPIDS, MICHIGAN

DATE
2/19/24

PAGE
1 OF 1

NB 5)

PENTWATER TOWNSHIP

A General Law Township

March 7, 2024

PROPOSAL: TO CHANGE TOWNSHIP BOARD MEETING DATES WHICH CONFLICT WITH THE REMAINING 2024 ELECTIONS.

ELECTION SCHEDULE	BOARD MEETING SCHEDULE
MAY 7, 2024	MAY 8, 2024
AUGUST 6, 2024	AUGUST 14, 2024
NOVEMBER 5, 2024	NOVEMBER 13, 2024

I'm proposing in the three months that there are Elections this year, that the Monthly Township Board Meeting be changed to the third Wednesday of the month. This would be beneficial to the Clerk's office, in preparing for the Board Meetings. It would allow for the organization, coordination and time that is needed by the Clerk's office to set up and run a successful Board Meeting.

I hope I have your understanding in this matter, and I encourage you to approve this proposal.

Best Regards,

Maureen Murphy
Pentwater Township Clerk
Phone (231) 869-6231 EXT 227
clerk@pentwatertwp.org